TAURUS

Assembly and operating instructions

Art. No. TF-X77

Elliptical cross trainer X7.7

Dear Customer,

Thank you for deciding for a high-quality training equipment of the brand Taurus, the brand that makes athlete's hearts beat faster. Taurus offers a wide range of home fitness equipment like elliptical cross trainers, ergometers, tread-mills and rowing machines. Taurus equipment is the optimal equipment for all those who want to train at home independent of goals and fitness level. For further information please visit www.sport-tiedje.com or www.taurus-fitness.de.

SAFETY NOTICE

Please read all of the instructions carefully before assembly and first use. These instructions are intended to ensure speedy assembly and explain safe usage. Make sure that all people exercising with the equipment (in particular children and persons with limited physical, sensory, mental or mo-tor capabilities) are informed about these instructions and its content in advance. In case of doubt, a responsible person must supervise the use of the equipment.

This equipment has been manufactured according to the latest safety knowledge. As far as possible, potential safety hazards which could cause injury have been eliminated. Make sure to follow the instructions carefully and that all parts are securely in place. If required, read through the instructions again to correct any mistakes.

Please pay close attention to the safety and maintenance instructions given here. The contract partner cannot be held liable for damage to health, accidents or damage to the equipment when it is not used in accordance with these instructions.

The equipment is suitable for home use as well as semi-professional use (e. g., hospitals, clubs, hotels, schools, etc.). It is not suitable for commercial or professional use (e. g., commercial gyms).

Retain these instructions in a safe place for future reference, maintenance or when ordering replacement parts.

CONTENTS

1.1 Technical data

LED display of

+ speed in km/h /cadence (rotations per minute)
+ training time in min
+ training distance in km
+ calories burnt in kcal
+ heart rate (when using the hand sensors or a chest strap)
+ Watts/Resistance level

Resistance system: Electronic magnet brake system
Resistance level: 16
Watt: 0 - 250 Watt

Total number of training programmes:	9
Pre-set programmes:	4
Manual programme:	1
Heart rate controlled programmes:	4

Balance mass:	19,6 kg
Transmission ratio:	1 : 10,3
Operation:	generator

Stride length:	50 cm
Maximum user height:	200 cm

Weight and dimensions:
Article weight (gross, incl. packaging): 111 kg
Article weight (net, without packaging): 104 kg
Packaging dimensions (L x W x H): approx. 1460 mm x 540 mm x 830 mm
Set-up dimensions (L x W x H): approx. 2020 mm x 780 mm x 1780 mm

Maximum user weight: 140 kg/ 309 lbs

1.2 Personal safety

+ Before you start using the equipment, you should consult your physician that this type of exercise is suitable for you from a health perspective. Particularly affected are persons who: have a hereditary disposition to high blood pressure or heart disease, are over the age of 45, smoke, have high cholesterol values, are overweight and/or have not exercised regularly in the past year.
+ Please note that working out excessively can seriously damage your health. Please also be aware that heart rate monitoring systems might be imprecise.
+ The equipment may only be used for its intended purpose; that means for whole body workouts for adults.
+ Any other usage is prohibited and potentially dangerous. The contract partner cannot be held liable for damage resulting from improper use.
+ The equipment is strictly for use by one person at a time.
+ Children should not be allowed unsupervised access to the equipment.
+ Before starting your training, make yourself familiar with all of the equipment's functions and setting options. Have an expert explain the correct usage of the product to you.
+ Make sure that nobody is in the range of motion of the equipment while exercising.
+ Keep your hands, feet and other body parts, hair, clothing, jewelry and other objects well clear of moving parts.
+ During use, wear suitable sports clothing rather than loose or baggy clothing. When selecting sports shoes, think about the suitability of the sole – preferably this should be made of rubber or other non-slip materials. Shoes with heels, leather soles, studs or spikes are not suitable. Never work out in bare feet.
+ It is also important to take note of the information given in the workout instructions for creating a training plan.
+ At the first signs of weakness, nausea, dizziness, pain, difficulty in breathing or other abnormal symptoms, stop your workout immediately and, if necessary, consult your physician.
+ Without prior agreement from your authorized contract partner, opening the equipment is prohibited.

1.3 Electrical safety

+ The machine requires a network connection of 220 - 230V with 50 Hertz mains voltage.
+ The equipment should be connected directly to a grounded plug socket only by means of the power cable supplied. The use of multi-socket adapters or similar is not recommended. Extension leads must comply with local electrical safety guidelines. Always fully unwind the power cable.
+ The outlet should be secured with a fuse with a minimum value of „16 amperes, slow“.
+ In order to reduce the risk of an electric shock, always unplug the equipment from the mains socket immediately after your workout, before assembly or dismantling, and before maintenance or cleaning. Do not pull on the cable.
+ When plugged in, do not leave the equipment unattended at any time. To avoid use by anyone unfamiliar with the operating instructions, the power cable should be removed when the equipment is not in use.
+ Keep the power cable away from heat, oil and sharp edges. Do not route the power cable underneath the equipment or under a carpet or rug, and do not place any objects on top of it.
+ Make no modifications to either the power cable or the mains plug.
+ If the power cable or the plug are damaged or defective, contact your authorized contract partner. Do not use the equipment in the meantime.
+ Do not keep electrical devices (e. g., mobile phones) in close proximity to the console or the control electronics, otherwise display values (e. g., pulse measuring) could be inaccurate.

1.4 Set-up place

+ The equipment should only be used indoors, in a sufficiently heated and dry area (ambient temperature between 10°C and 35°C). The equipment should not be used outdoors or in rooms with high humidity (over 70%) like swimming pools. The equipment should only be stored in surroundings with an ambient temperature between 5°C and 45°C.
+ The training room should be well ventilated during training and not be exposed to any draughts.
+ Choose a location in which to place the equipment such that there is enough free space/clearance to the front, the rear and to the sides of the equipment (at least 1.50 m). Furthermore, the equipment should not be set up in main entrances or on escape routes.
+ Always keep the power cable away from hot surfaces and grounds and make sure that the cable is not stuck somewhere or becomes a „trip hazard“.

+ No objects of any type should be inserted into the openings of the equipment.
+ The equipment should be placed on a level and solid surface, any unevenness in the floor should be leveled out.
+ A floor protective mat / equipment underlay can help to protect high-quality floor coverings (parquet, laminate, cork, carpets) from dents and sweat and can help to level out slight unevenness.

2 ASSEMBLY INSTRUCTIONS, MAINTENANCE AND CARE

2.1 General instructions

+ Please check if all parts and tools belonging to the equipment are included in the delivery and if there is any transport damage. If there are any complaints, please contact your contract partner directly.
+ Some of the nuts and bolts to be used in assembly are already pre-mounted in order to make set-up as easy as possible.
+ The equipment must be assembled by adults. In case of doubt, ask for assistance from another person with technical skills.
+ Keep children away from the equipment during assembly, because small parts are included in the delivery and may be swallowed.
+ Make sure that you have enough space (at least 1.50 m) in every direction during assembly.
+ Do not leave any tools and packaging materials like plastic sheeting laying around to avoid danger of suffocation for children.
+ Assemble the equipment on an underlay mat or on the cardboard packaging in order to avoid damage to the equipment and to the floor (scratches).
+ Before starting assembly, all individual parts should be placed on the floor next to each other.
+ Read the assembly instructions carefully and assemble the equipment according to the illustrations. Proceed carefully and cautiously.
+ First loosen all parts and check for their correct fitting. Then tighten the screws using a too.
+ Modifications to the design or improper repairs may pose a hazard to the user and should not be carried out. The product warranty may be void as a result.
+ Only authorized service technicians are permitted to carry out all servicing and/or repairs – it excludes maintenance and care.
+ Damaged or worn components may impair your safety and the lifespan of the equipment. You should therefore immediately replace damaged or worn components. Please contact your contract partner in such a case. The equipment should no longer be used until it has been repaired. When needed, only use original Taurus spare parts.

+ Check the tightness of all screw connections once a month.
+ In order to be able to guarantee the constructively defined safety level of this equipment, we recommend having the equipment regularly maintained (at least once a year) by specialists (service technicians of your contract partner).
+ The equipment may be cleaned of dust, dirt and sweat using a damp cloth. The use of solvents should be strictly avoided. Also, make sure that no liquids (e. g. sweat) get into the openings of the equipment (e. g. console).

2.2 Faults and troubleshooting

The equipment runs through regular quality controls during production. Nevertheless, errors or malfunctions on the equipment may occur. Individual parts are often the cause of faults and replacement is usually sufficient. Please use the following overview to see the five most common errors and how to repair them. If the equipment still does not work properly, please contact your contract partner.

Problem	Cause	Solution
Drive discs wobble or make noises	Drive pulley is loose	Tighten nuts
Display does not work	No plug connection, power supply not plugged in	Check all plug connections and see if the power supply is plugged in
Footplates are creaking	Footplates are loose	Tighten up the footplate screws
Creaking noises	Screws are loose	Check screws are properly tightened
No pulse reading	• Sources of interference in the room • Using a chest strap: - Unsuitable chest strap - Chest strap is incorrectly positioned - Batteries are empty oder discharged	• Eliminate sources of interference (e. g. mobile phone, loudspeaker, etc.) • Use a suitable chest strap (see recommended accessories) • Reposition the chest strap and/or moisten the electrodes • Change or charge the batteries

2.3 Maintenance and service calendar

The following routine work must be done in the specified time intervals:

Part	Weekly	Monthly	Twice a year	Annually
Display console	C	I		
Lubricate the moving parts			I	
Plastic cover	C	I		
Screws and cable connec-tions		I		
Legends: C = cleaning; I = inspect				

3.1 Package contents

The package contains the parts represented in the illustration, including a power cable with mains plug. If one of the illustrated parts is missing, please contact your contract partner.

A. Frame Assembly

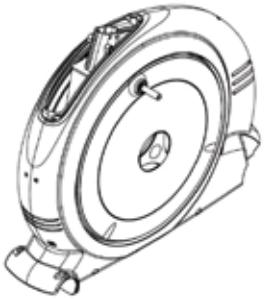

E. Upper Control Tube Assembly

B. Front Stabilizer Assembly

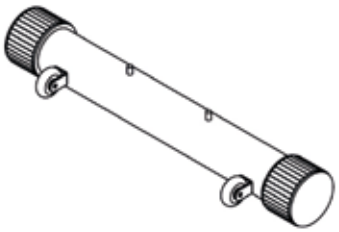

F. Computer Console

C. Stabilizer Assembly

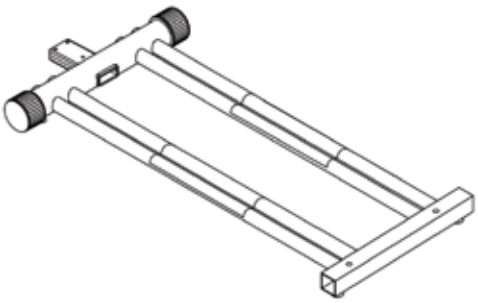

G. Handle Assembly

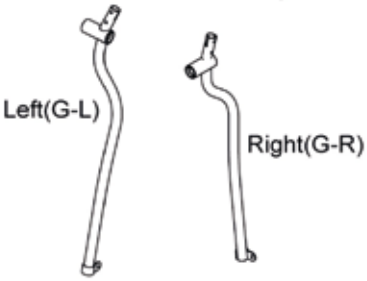

D. Pedal Assembly

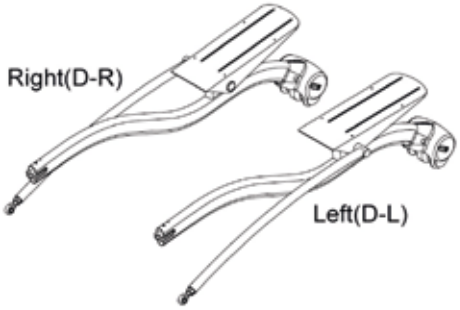

H. Upper Handle Tube Assembly

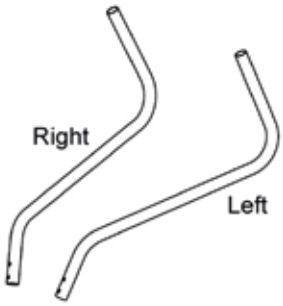

I. Middle Cover of Frame

J. Rear Stabilizer Cover

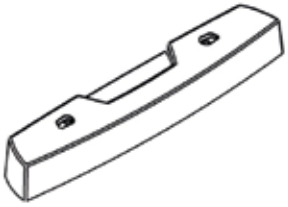

K. Control Tube Plastic

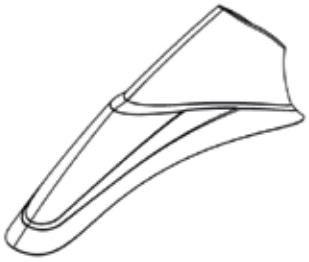

L. Handle Tube Cover

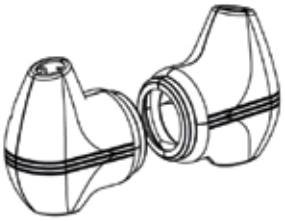

M. Connecting Rod Cover

N. Stabilizer Tube Cover

O. Pedal

P. Bottle Shelf

Q. Bottle Shelf Fixer

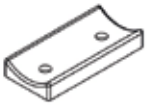

R. Lower Computer Cover

S. Accessory Pack

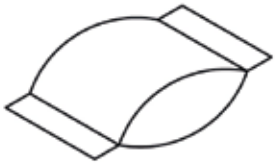

Screws and tools

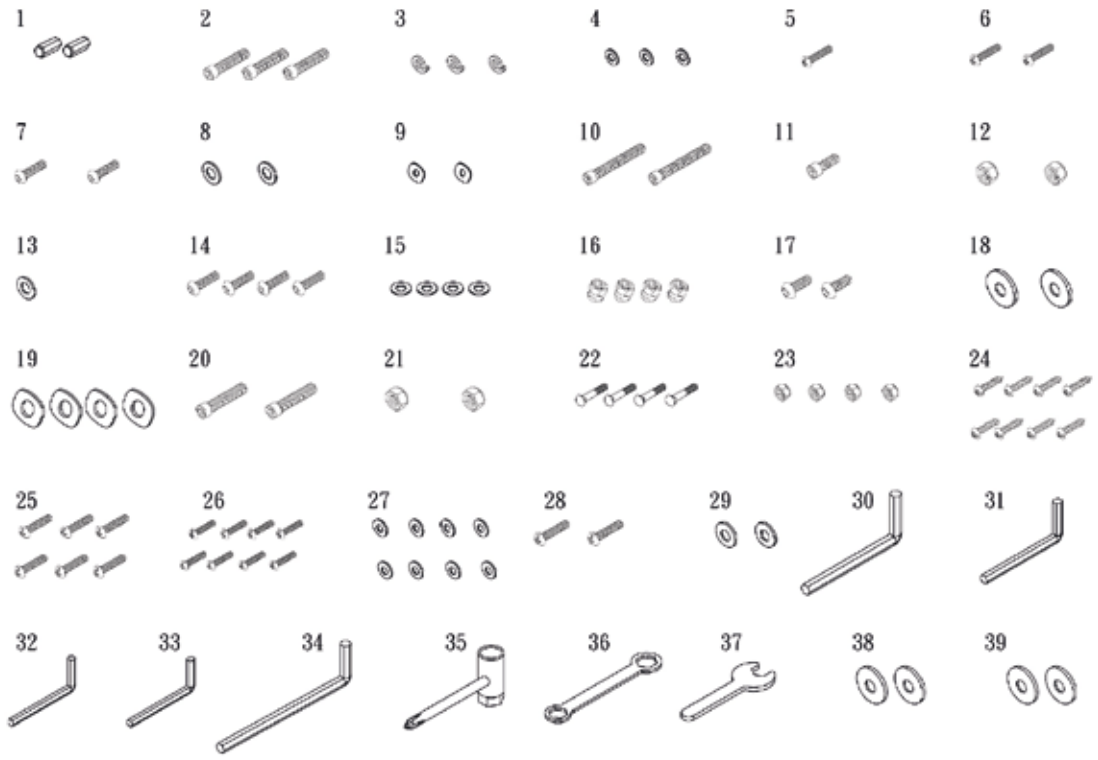

Step	Itme	Description	Qty
1	1	Long Hex Nut	2
2	2	CKS Hex Screw M10x40 Blue Nylonpatch	3
	3	Spring Washer M10	3
	4	Flat Washer Ø10x Ø20x1.5t	3
3	5	Truss Philips Screw M5x10	1
	6	Truss Philips Screw M4x15	2
	39	Flat Washer Ø4x Ø10x1.0t	2
4	7	Truss Hex Screw M8x15- Blue Nylonpatch	2
	8	Washer Ø8x Ø25x2.0t	2
	9	Wave Washer Ø17x Ø24x0.3t	2
5	10	CKS Hex Screw M10x70	2
	11	CKS Hex Screw M8x15	1
	12	Nylon Nut M10	2
	13	Washer Ø8x Ø25x2.0t	1
6	14	Truss Hex Screw M4xP0.7x8 Blue Nylonpatch	4
	15	Washer Ø6x Ø13x2.0t	4
	16	Acorn Cap Nut M6xP1.0	4

Step	Itme	Description	Qty
7	17	Truss Hex Screw M8x15 Blue Nylonpatch	2
	18	Flat Washer Ø8.5xØ30x2.0t	2
	19	Wave Washer Ø26.4x Ø34.2x0.3t	4
	20	CKS Hex Screw M12x40	2
	21	Nylon Nut M12	2
	38	Flat Washer Ø25x Ø35x1.0t	2
8	22	Carriage Screw M8x45	4
	23	Nylon Nut M8	4
9	24	Truss Philips Self Tapping Screw Ø5x15	8
10	25	Truss Philips Screw M4x15	6
11	26	Blue Nylonpatch	8
	27	Washer Ø6x Ø13x1.0t stainless steel	8
12	28	Truss Philips Screw M6x15	2
	29	Washer Ø6x Ø13x1.0t	2
Tools	30	IHex Wrench 75x150<8MM>	1
	31	Hex Wrench 10mm	1
	32	Hex Wrench 6mm	1
	33	Hex Wrench 5x25x67mm	1
	34	Hex Wrench +Screwdriver 5x40x180mm	1
	35	Bushing Wrench + Screwdriver 13mm+17mm Zinc	1
	36	Lug Wrench -19mm+13mm<Galvanization	1
	37	Open end wrench 10mm	1

3.2 Assembly instructions

Before starting assembly, look carefully through the individual assembly steps shown and assemble the equipment in the order indicated.

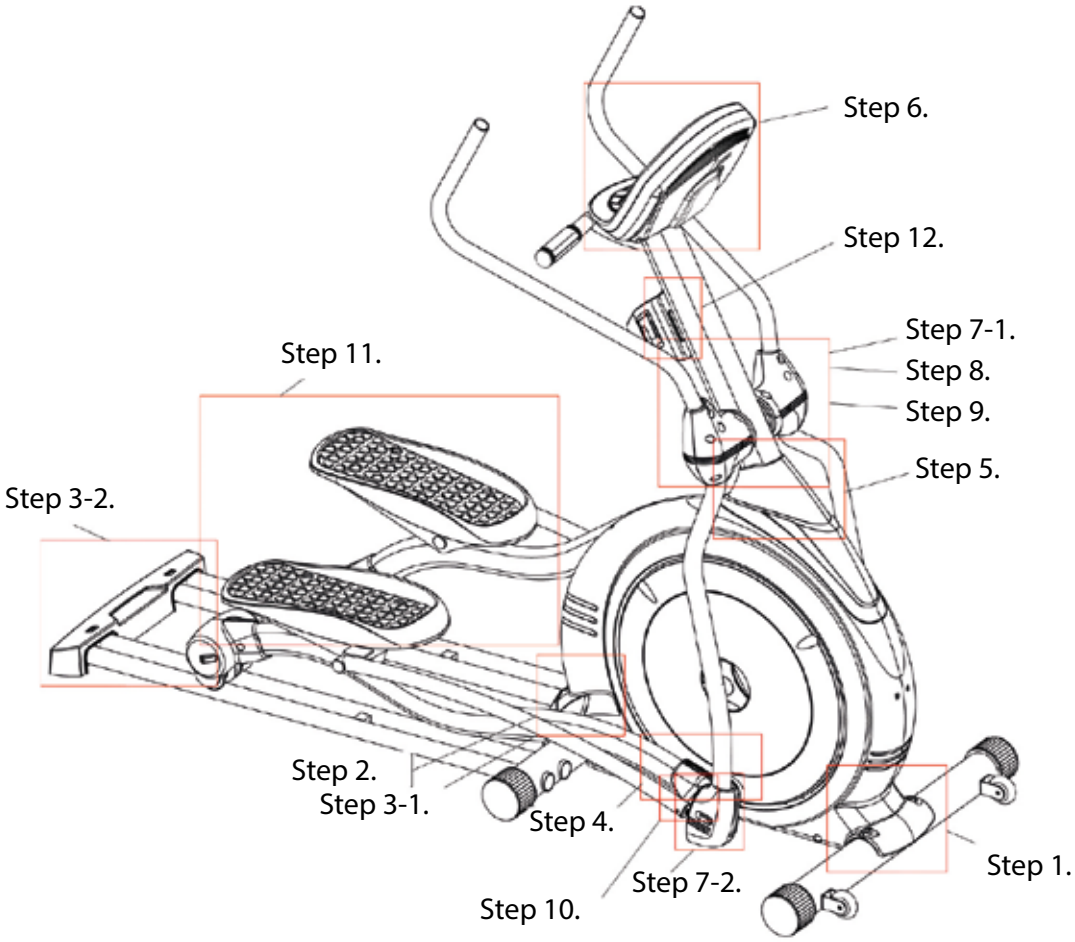

Step 1: Assembly of the frame and the front base

Mount the frame (A) on the front base with the screws. Then cover the long hexagon nuts (1).

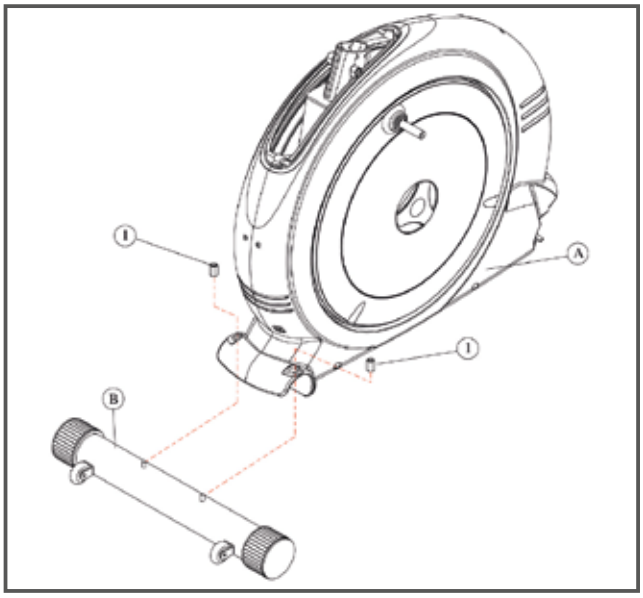

Step 2: Assembly of the frame

Insert the base assembly (C) in the frame and mount it with the screws (2,3,4).

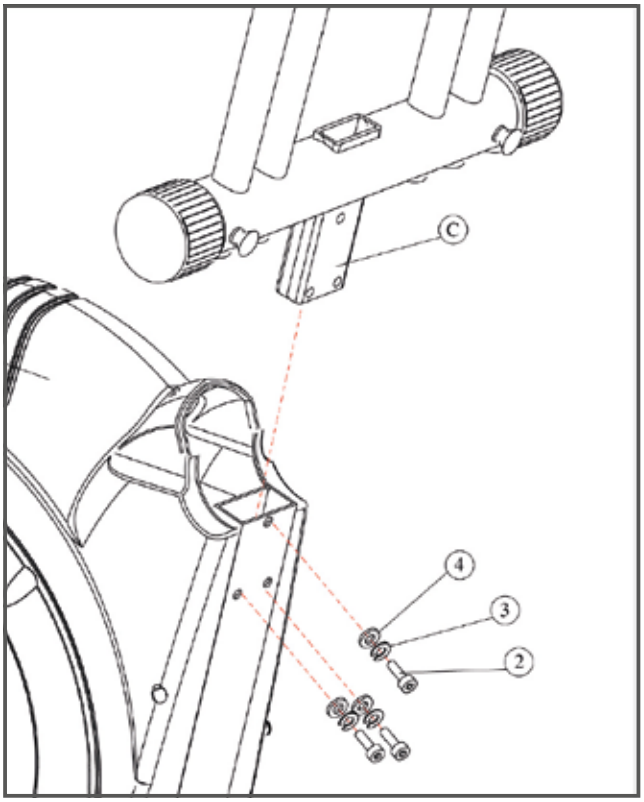

Step 3: Assembly of the middle cover and the base

Place the middle cover (I) between the base assembly and mount it with the screw (5). Cover the rear cross tube with the cover (J) and the screws (6).

Attention: After the assembly, make sure that the centre as well as the rear part of the equipment stand evenly.

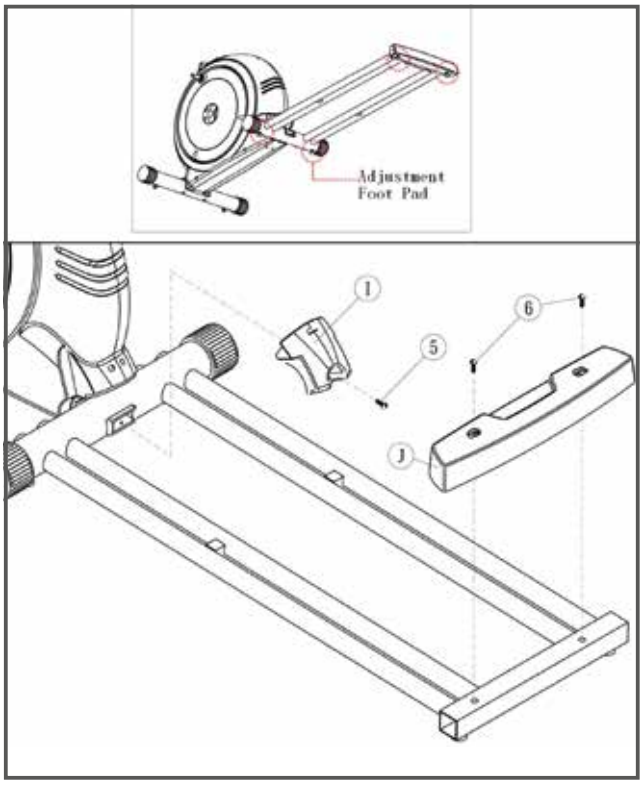

Step 4: Assembly of the pedal components

Place the washer (9) on the crank axle and the left side (D-L) of the pedal assembly on the left side of the frame crank axle. Then place the washer (8) on it and mount the left pedal assembly with the screw (7).

Place the washer (9) on the crank axle and the right side (D-R) of the pedal assembly on the right side of the frame crank axle. Then place the washer (8) on it and mount the right pedal assembly with the screw (7).

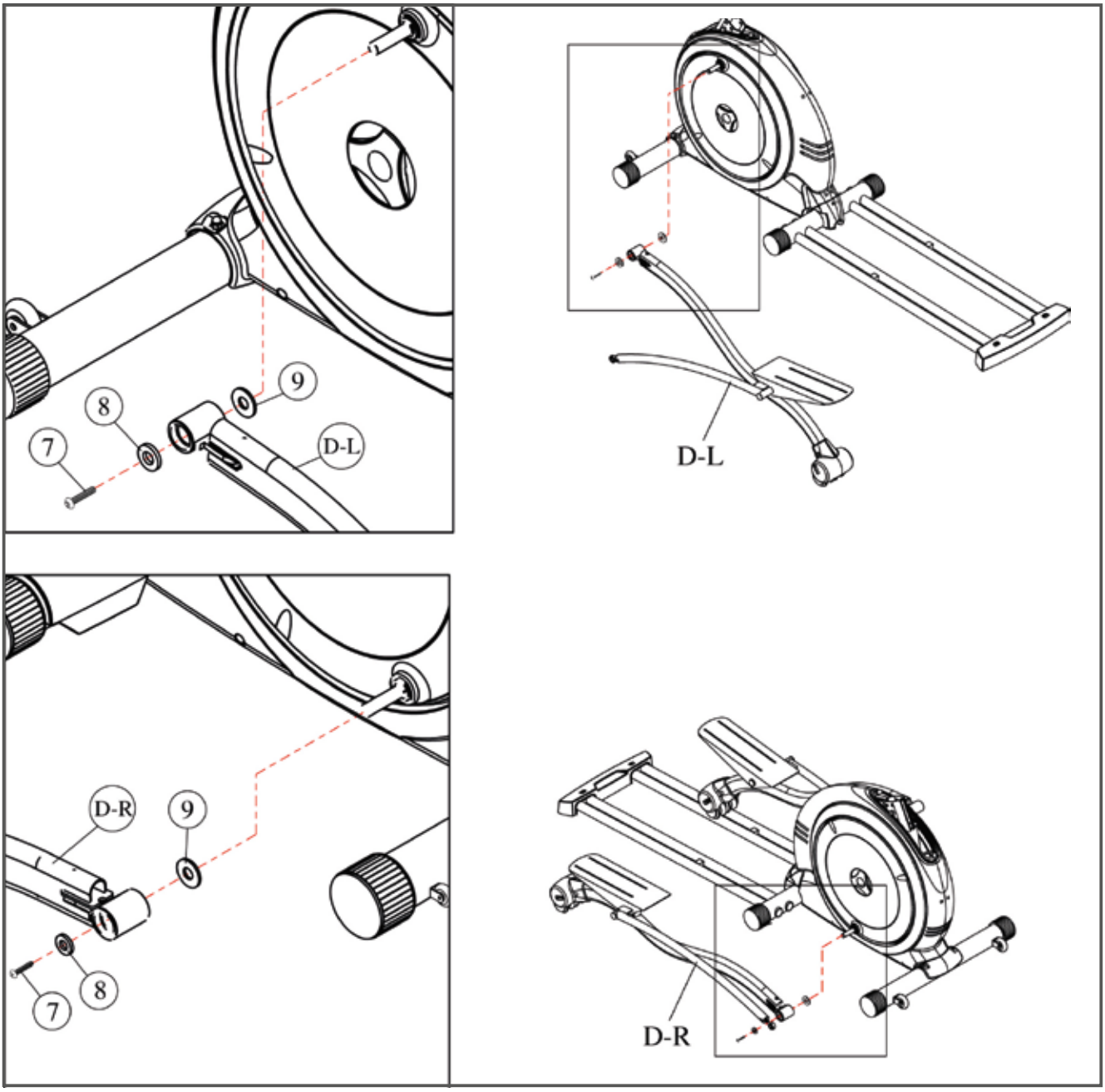

Step 5: **Assembly of the front frame**

Accomplish this assembly step with two persons if possible. While one person is holding the front frame (E) and is putting it in the respective hole, the other person tightens the screws.

While tightening the screws, make sure that none of the screws falls inside the casing.

Insert the front frame (E) in the plastics cover (K). Then insert the front frame (E) in the respective hole of the main frame (A). Connect the respective cable endings with each other. Then press the plastics cover (K) down, before you mount the frame with the mounting parts (10, 11, 12, 13).

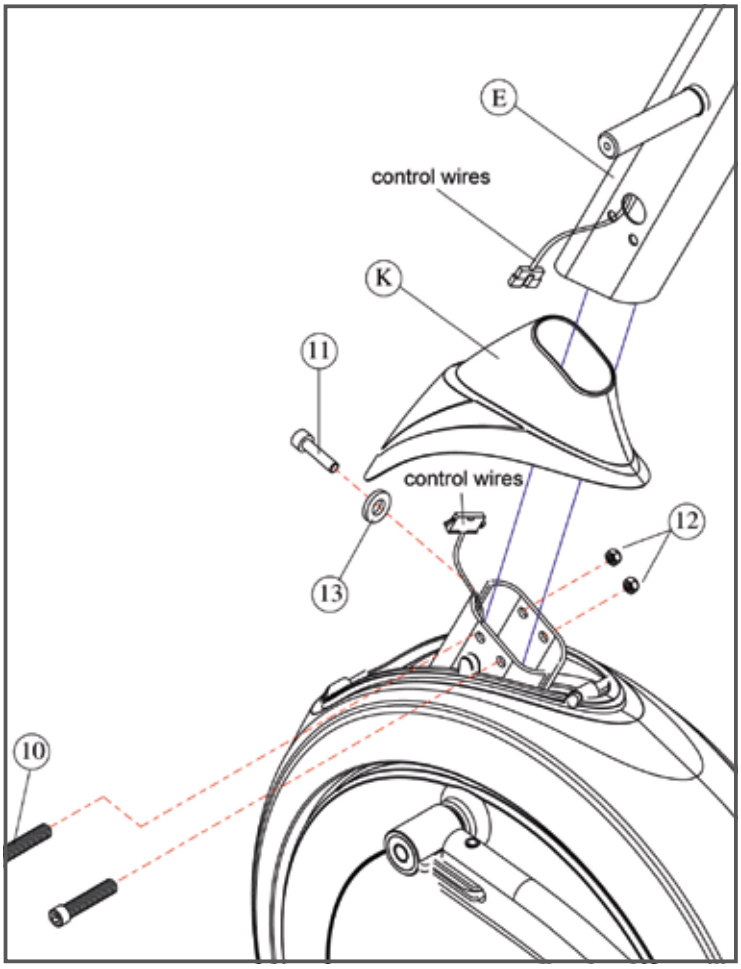

Step 6: Assembly of the computer console

Place the pre-drillings behind the computer one on top of the other and mount the computer (F) with the screws (15, 16). While assembling it, make sure that the computer is appropriately mounted in order to avoid possible damages to the computer.

Once the computer is assembled, connect all signals. Please pay attention to the respective directions of connection.

Mount the lower computer cover (R) with the screw (14). Make sure that the cables do not get clamped. Please also avoid an excessive bending of the cables, because it might result in damages.

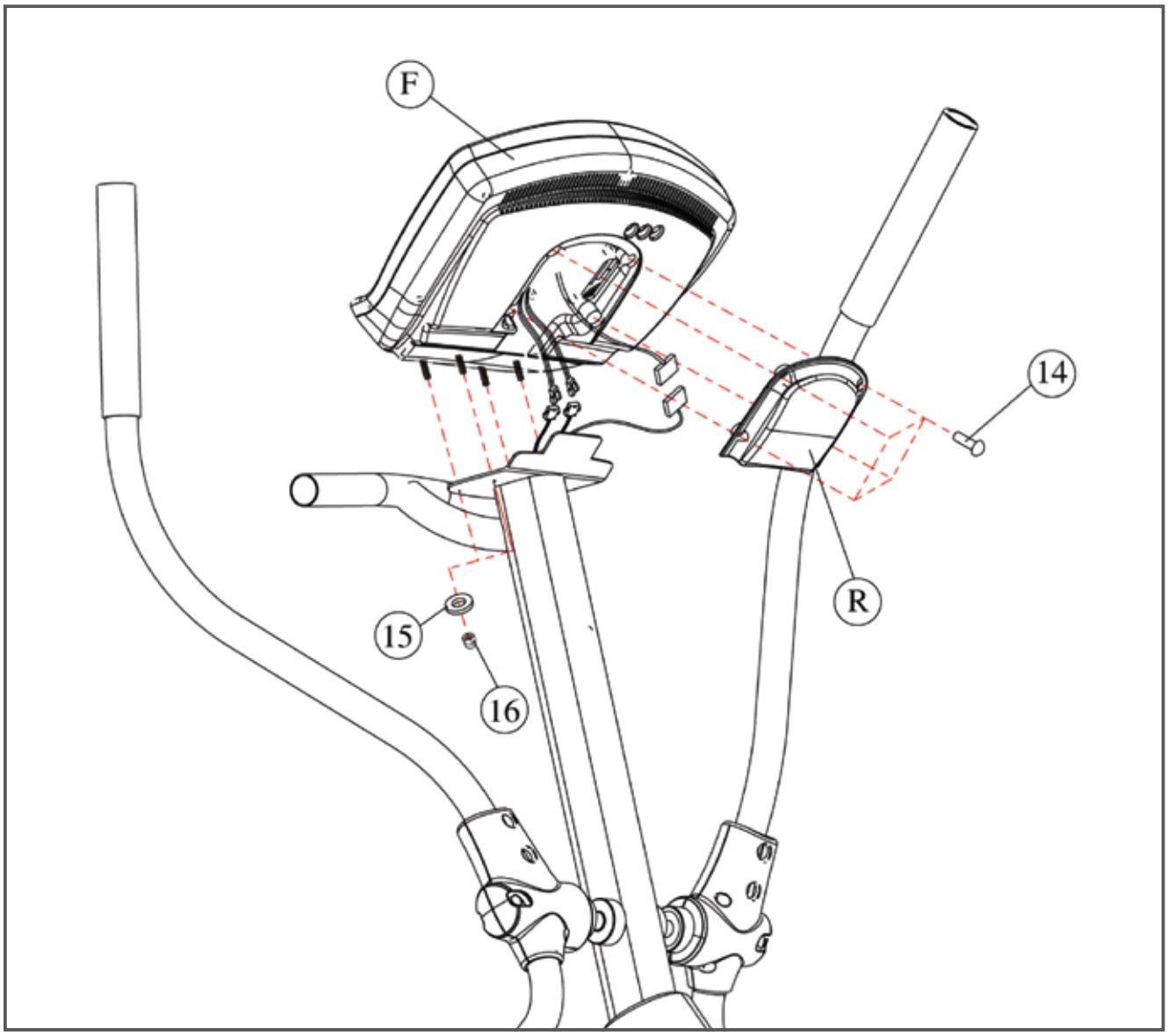

Step 7: Assembly of the swing arms

1.1: Place the washers (19) next to each other. Then place the handlebar cover (G-L) on the illustrated tube of the front frame (E). Mount it with the parts (17, 18).

Please pay attention to the different sides of the handlebars during the assembly.

Repeat this assembly step for the other side as well (1.3).

Then mount the lower part of the swing arms according to the illustration 1.2 respectively 1.4 with the accessory parts (20, 21) to the pedal components.

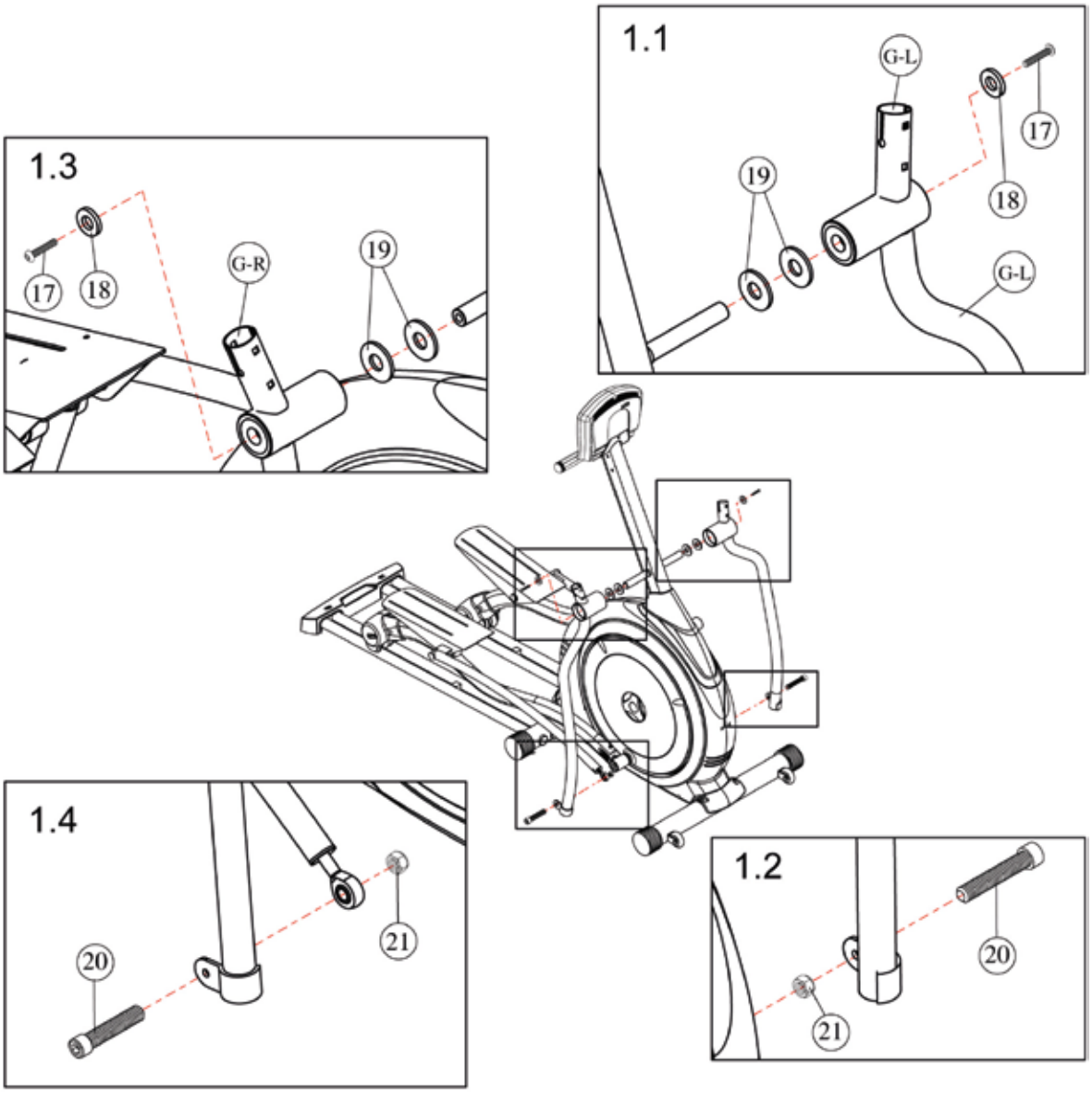

Step 8: Assembly of the upper handlebars

Put the upper handlebars (H) on the respective holders of the swing arms and mount it with the screws (22,23).

Please pay attention to the different sides of the handlebars during the assembly as well.

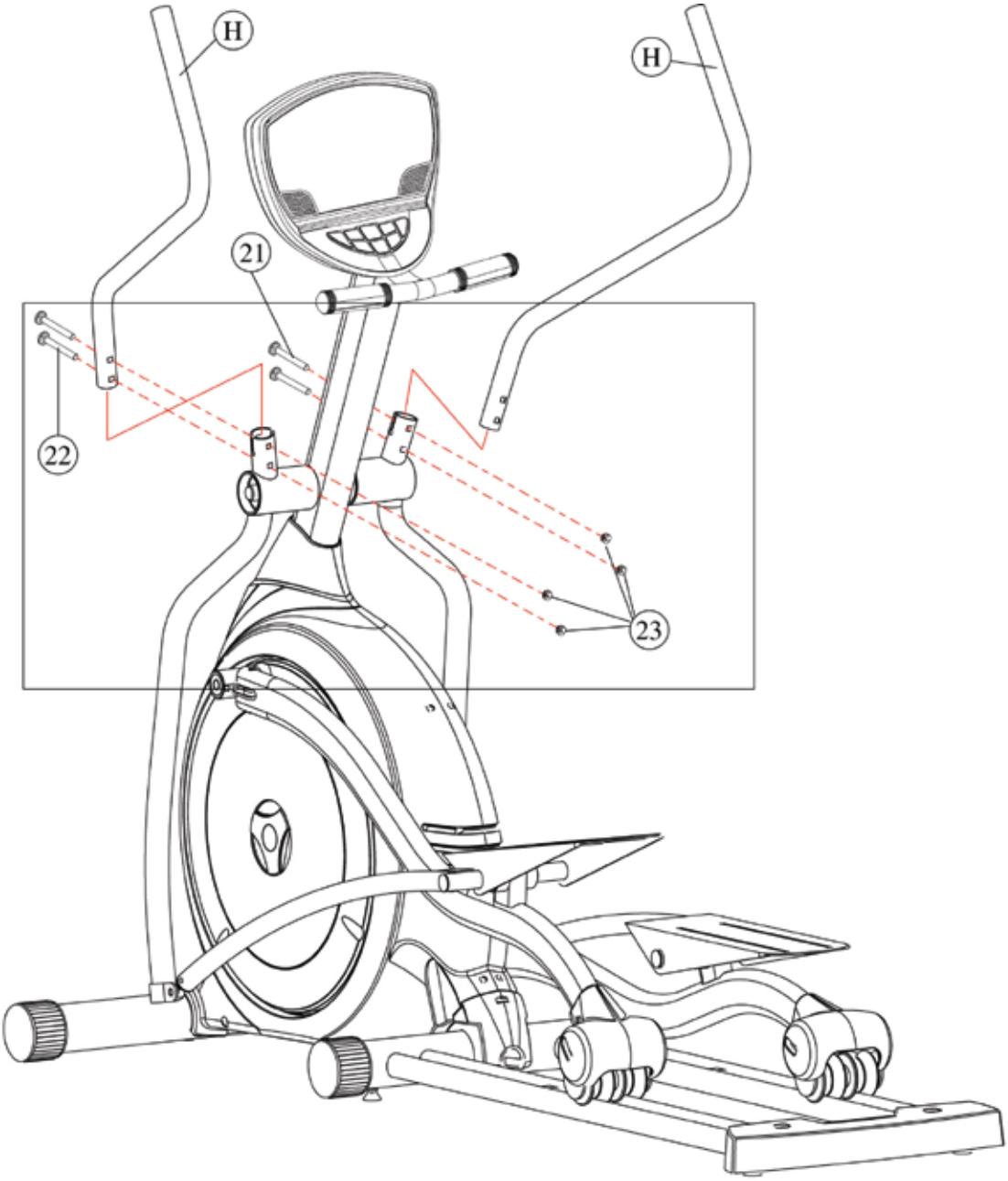

Step 9: Assembly of the plastics covers (handlebars)

Place the covers (L) on the equipment according to the illustration and mount these with the screws (24).

Make sure that the plastics covers align and are appropriately connected.

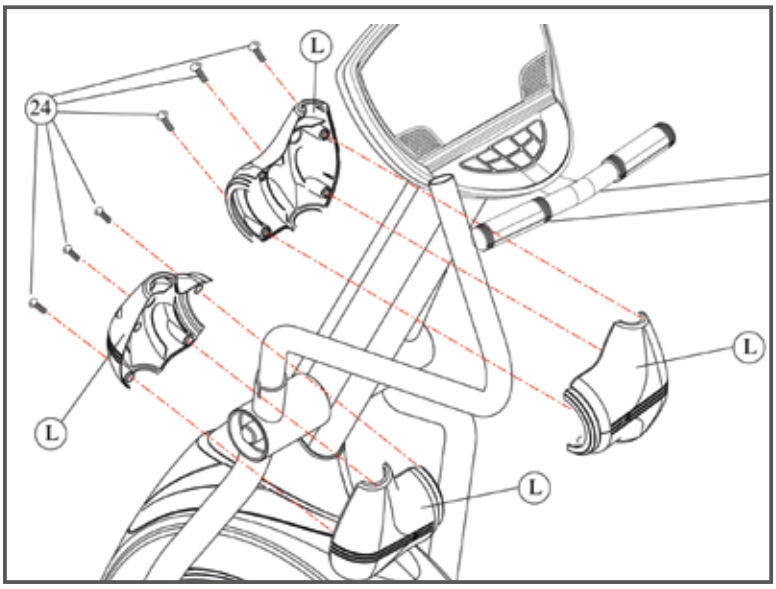

Step 10: Assembly of the plastics covers (pedals)

Connect the left and right pedal cover (N) with the respective pedal components. Check that all pre-drillings on the plastics cover align with those of the steel tube. Mount it with the screws (25).

Then mount the left and right cover (M) on the left and right swing arm. Mount it also with the screws (25).

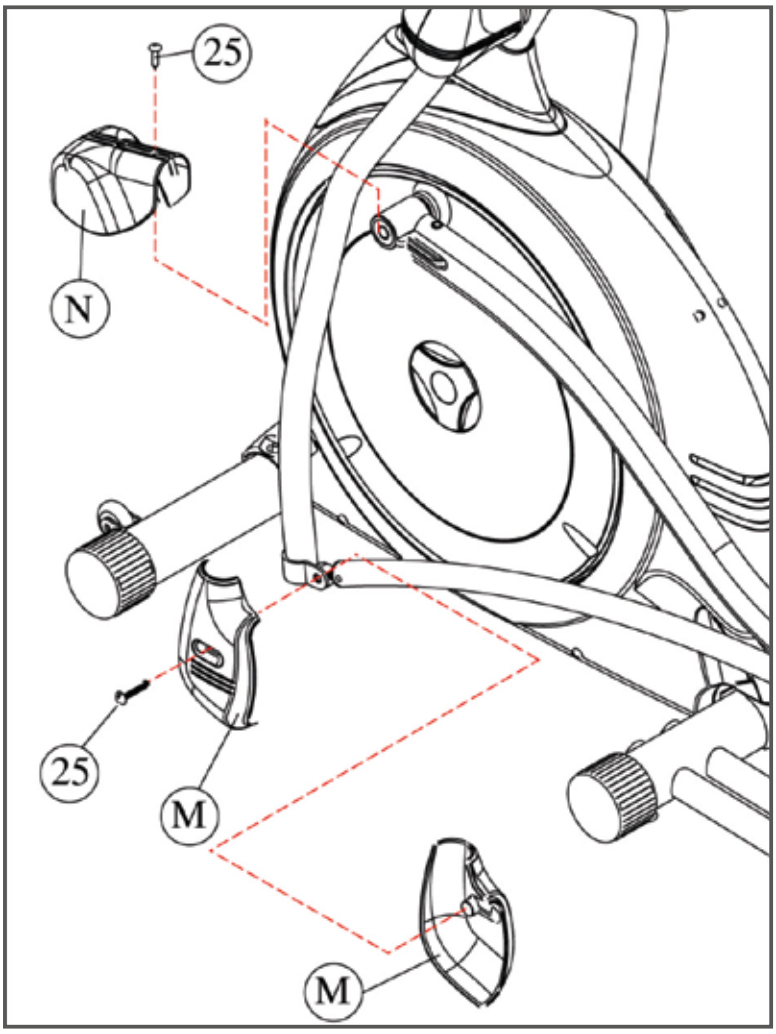

Step 11: Assembly of the pedals

Place the pre-drillings of the left pedal (O) on the respective pre-drillings of the pedal rods. Mount the pedals with the washers (27) and the screws (26).

Repeat this step with the right pedal on the right pedal rods.

Tip: There are directions indicated on the pedals, which are meant to facilitate the assembly. Please pay attention to these directions provided.

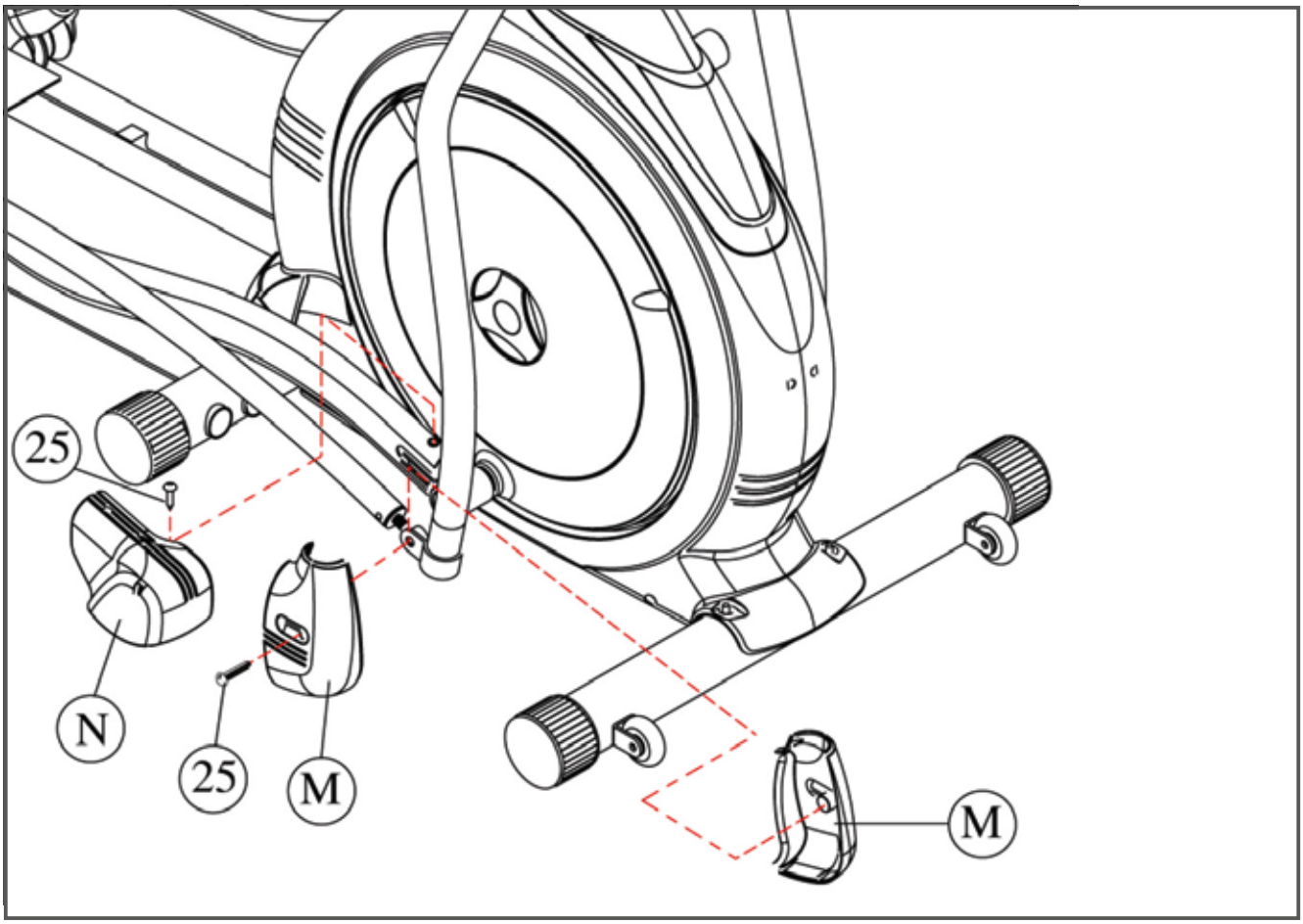

Step 12: Assembly of the cup holder

Mount the cup holder (P) and the fixation of the cup holder (Q) on the front frame construction. Mount it with the sealing washer (29) and the screw (28).

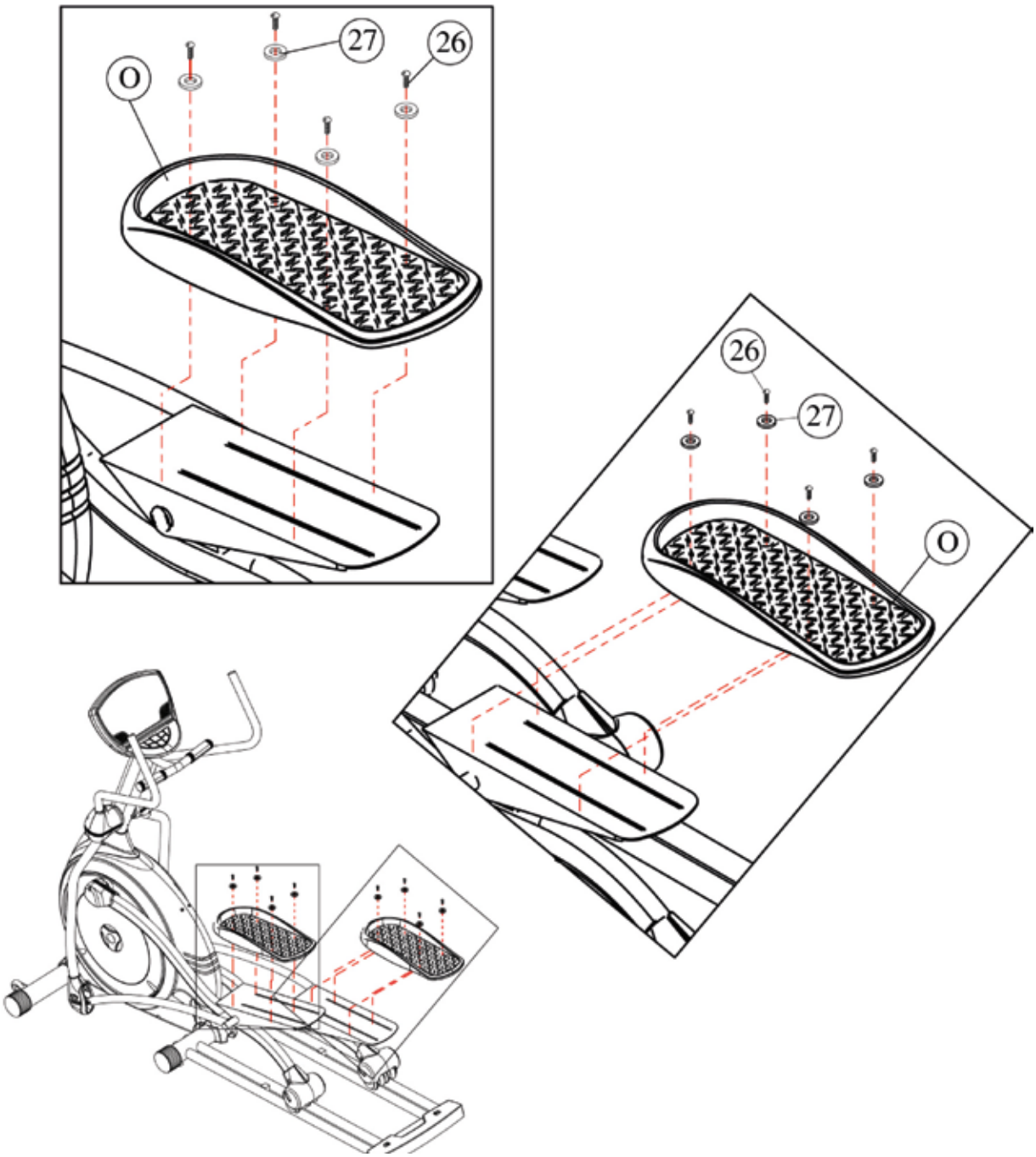

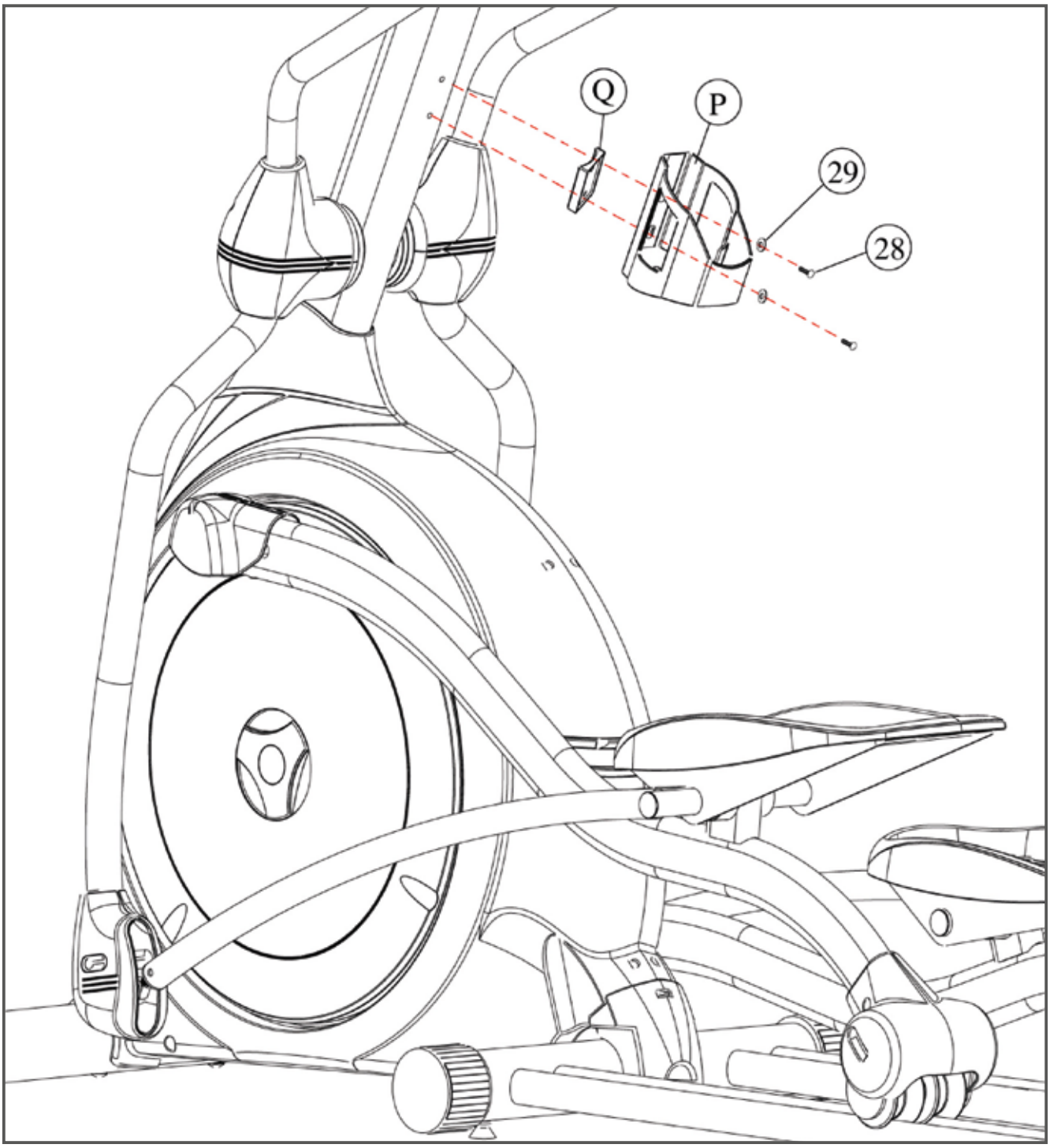

After finishing the assembly, please check again that all screws are tightened.

Lubrication

Apply 2 ml of the lubricant under the middle of the rail. It is recommended to apply the lubricant every three months.

When you notice that the movement is not smooth and even or noises can be heard, apply 2 ml of the lubricant in the middle of the rail.

Transport

The machine is equipped with transport wheels for an easy transport of the equipment. Lift the equipment at the rear end to move it.

4.1 Console display

CALORIES	Calorie consumption in kcal **Note: Measuring the calorie consumption** The calculation of the energy consumption is done by means of a general formula. It is not possible to calculate an individual energy consumption exactly, because a multitude of personal data is required here. In order to make an approach to your actual energy consumption possible, you can set your body weight with this model.
TIME	Training time
HEART RATE	Heart rate
RPM	Speed in rotations per minute
DISTANCE	Training distance in km
WORKLEVEL	Level of difficulty

WATT	Resistance in watt
METS	Metabolic equivalent (= measure, which is used for expressing the oxygen cost (oxygen consumption per unit of body weight), which is required for accomplishing a task. A MET corresponds to the approximate metabolism of a sitting person at rest.

4.2 Button functions

QUICK START	Confirm the settings
ENTER	Select programmes and set values
RESET	Reset all values
+ button	Choose profiles and increase intensity
- button	Choose profiles and reduce intensity
Display Shift	Switch the display function
Program Profiles	splay the chosen training profile

4.3 Turning on the equipment

The self power-generating elliptical cross trainer can be placed independently of sockets. The resistance of this elliptical cross trainer is generated by a continuous use. The elliptical cross trainer has a low resistance, when the speed is below 60 RPM (rotations per minute).

Energy save function
The computer is equipped with an energy save function. That means: Once the user is doing the elliptical movement, the dynamo generates power itself. The provided, rechargeable 3A batteries of the computer save the generated power and use it when a speed signal is not received or the training is stopped.

Note: When the equipment is delivered, the batteries are not charged. Please charge the batteries completely by means of a standard battery charger (charge time of 10 to 20 hours).

Alternatively, you can start the training immediately, so that the batteries are charged by the self-generated power. Please pay attention to the fact that only training sessions of 30 minutes and more can influence the charging of batteries with a lasting effect.

When the speed signal is no longer received and the training is stopped and the computer has not been used for more than a minute, the backlight turns off for one minute. When the computer will not be used after one minute, it turns off automatically. All values will be reset then.

Start Display:
When you use the equipment, the scrolling text SET WEIGHT is displayed. Press WEIGHT for entering the weight and then set the body weight (in kg) with the + and – buttons. Setting the weight serves the calculation of the calorie consumption during the training session. When the setting is finished, press ENTER.

Now you can choose the type of your training: In order to start with a pre-defined training programme, select a respective training profile (PROGRAM PROFILES). Press MANUAL for a manual training. Press QUICK START, when you want to start the training immediately without a training programme.

4.4 Programmes

Choose one of the following programmes with the control knob:

- Manual programme: 1
- Different profiles for pre-set training programmes: 4
- Heart rate controlled training programmes: 4

4.4.1 Manual programme

Press MANUAL to get to the manual mode. At first, the dot matrix displays the lowest level of difficulty. Press ENTER in order to set a training duration. SET TIME is displayed and you can choose a training time of 1 to 99 minutes with the + and – buttons.

When you press START in the manual mode, your training starts immediately. The time counts up starting from 00:00. Throughout the training, you are informed about time (TIME), covered distance (DIST), speed in rotations per minute (RPM), and burnt calories (CAL).
Press DISPLAY SHIFT and the values of level of difficulty (LEVEL), resistance in watt (WATT), the metabolic equivalent (METS) as well as your current heart rate (PULSE) are displayed as well. The latter is only done, when a chest strap is worn for telemetric heart rate measuring and when the elliptical cross trainer can receive a pulse signal. The level of difficulty can be adjusted by pressing the + and – buttons at any time. When you have achieved your preferred training duration, that means that the pre-set training is counted down to 00:00, the computer gets automatically in to the STOP mode. Here you can look at your training values as well as the training process by means of the dot matrix for a short time.

Profile of the manual training programme

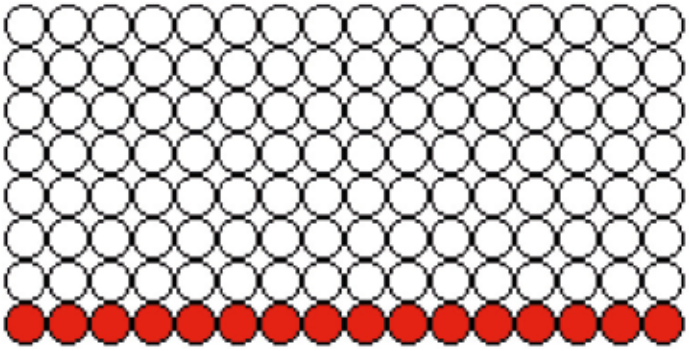

4.4.2 Training programmes

Choose any pre-set training programme and then set further values (training duration, etc.).

Profiles of the pre-set training programmes

Random Profile

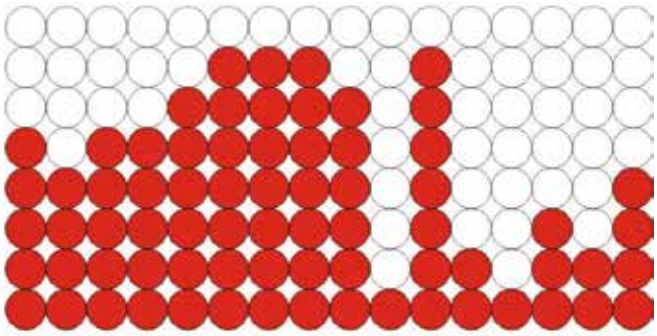

Weight Loss Profile

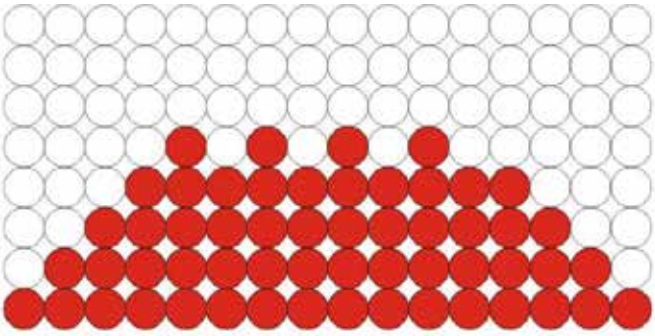

Hill Intervals Profile

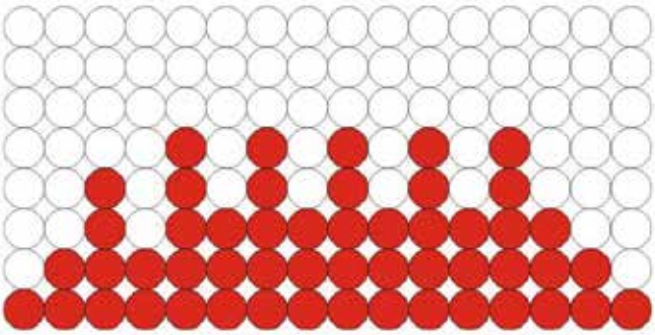

CV Workout Profile

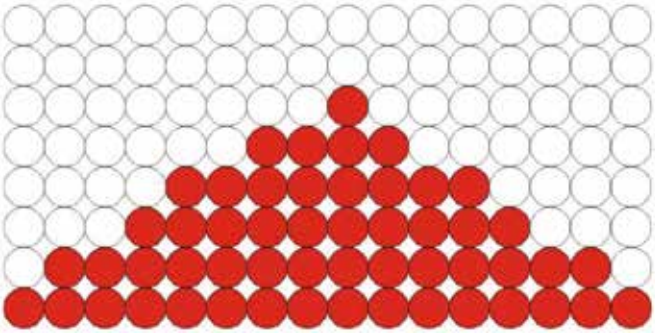

When you have chosen a pre-set training programme, you have the possibility to do the training according to certain levels of difficulty. Here, 16 pre-saved levels from L1 to L16 are displayed. Press the + or – button to set the preferred level of difficulty.

The matrix window displays the process of the training programme. Then press ENTER to set the time. The default value of the programme is 30 minutes; it can be set from 1 to 99 minutes (in 1-minute increments). After the setting, press ENTER or START to start the running training.

When you skip the settings of level and time after the selection of the training programme and press START directly, the non-chosen values are displayed according to the default values. Throughout the training, you are informed about time (TIME), covered distance (DIST), speed in rotations per minute (RPM), and burnt calories (CAL).

Press DISPLAY SHIFT and the values of level of difficulty (LEVEL), resistance in watt (WATT), metabolic equivalent (METS) as well as your current heart rate (PULSE) are also displayed. The latter is only done, when a chest strap is worn for telemetric heart rate measuring and when the elliptical cross trainer can receive a pulse signal. The level of difficulty can be adjusted by pressing the + and – buttons.

When you have achieved your preferred training duration, that means that the pre-set training time is counted down to 00:00, the computer gets automatically in to the STOP mode. Here, you can look at your training values as well as the training process by means of the dot matrix for a short time.

4.4.3 Heart rate controlled programmes

Press HRC to choose a heart rate controlled programme. Press ENTER until you get to the selection of your age. When AGE is displayed in the LED display, set your age with the + and – buttons. The default value is 25 years. Confirm your setting of age with ENTER. Then the pulse value (PULSE) is displayed on the LED display.

The computer calculates the target pulse depending upon the set age. It is 55% of the maximum heart rate and is perfect for weight reduction.

When you want to do a fitness or cardio training, choose either the HRC programme 70% or 80 % (of the maximum heart rate) or the fourth heart rate controlled programme (SET HRC) with the + and – buttons. Set your target heart rate independent of the values mentioned above with the latter one. Use the + and – buttons here as well.

After setting the target heart rate, you can choose the duration of the training programme with the + and – buttons. The default value of the programme is 30 minutes; it can be set from 1 to 99 minutes (in 1-minute increments). Press ENTER or START after the setting to start your running training.

Every HRC programme starts with a warm-up phase of two minutes. After it, BEGINNING HR is displayed and the resistance is slowly adapted so that your target heart rate is achieved and then constantly kept.

If your pulse cannot be received for 60 seconds or if you have finished your workout, you return to the START mode.

Profiles of the HRC training programmes

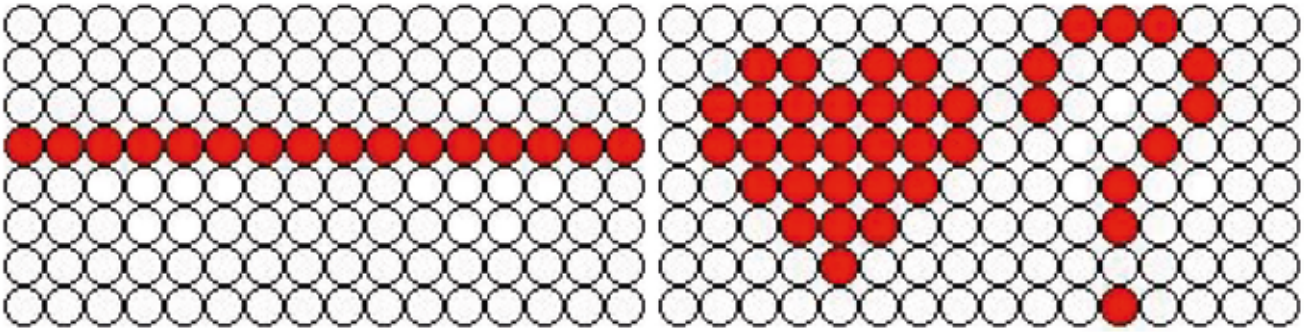

The following chart shows the relation between age and heart rate.

Age	BPM			Age	BPM			Age	BPM		
	H	Base	L		H	Base	L		H	Base	L
13	197	124	124	36	175	110	110	59	153	97	97
14	196	124	124	37	174	110	110	60	152	96	96
15	195	123	123	38	173	109	109	61	151	95	95
16	194	122	122	38	172	109	109	62	150	95	95
17	193	122	122	40	171	108	108	63	149	94	94
18	192	121	121	41	170	107	107	64	148	94	94
18	191	121	121	42	169	107	107	65	147	93	93
20	190	120	120	43	168	106	106	66	146	92	92
21	189	119	119	44	167	106	106	67	145	92	92
22	188	119	119	45	166	105	105	68	144	91	91
23	187	118	118	46	165	104	104	69	143	91	91
24	186	118	118	47	164	104	104	70	143	90	90
25	185	117	117	48	163	103	103	71	142	90	89
26	184	116	116	49	162	103	103	72	141	90	89
27	183	116	116	50	162	102	102	73	140	90	88
28	182	115	115	51	161	101	101	74	139	90	88
29	181	115	115	52	160	101	101	75	138	90	87
30	181	114	114	53	159	100	100	76	137	90	86
31	180	113	113	54	158	100	100	77	136	90	86
32	179	113	113	55	157	99	99	78	135	90	85
33	178	112	112	56	156	98	98	79	134	90	85
34	177	112	112	57	155	98	98	80	133	90	84
35	176	111	111	58	154	97	97				

BPM = Heart rate = beats per minute

(H): = 95% of the max. heart rate; maximum value for pulse control
(L): = 60% of the max. heart rate; minimum value for pulse control
(Base): = 60-70% of the max. heart rate; recommendable for weight reduction

5.1 Heart rate measuring

Pulse measuring through hand sensors
The hand sensors integrated in the handles allow you to determine your heart rate. You can measure your heart rate by lightly grasping the sensors with both hands at the same time. Blood pressure changes occur due to the heartbeat. The sensors measure the changes to the electric skin resistance caused by it. These values are then used to create an average and are displayed on the screen of the console as a heart rate.

Note:
For some people, the skin resistance change caused by the heart rate is so minimal that the measurements do not allow for usable values. Strong callus or sweat on the hands may also impair a correct measurement. In such cases, the heart rate will not be shown at all or only incorrectly.

If the measurement is incorrect or not taken at all, please check if it happens to only one person or to several people. If the pulse display only does not work in a single case, the equipment is not defective. In this case, we recommend using a chest strap to achieve a permanently correct heart rate display.

CAUTION: Your training equipment is not a medical device. Different factors may influence the accuracy of the heart rate display. The heart rate display only serves as a training aid.

Telemetric heart rate measuring
This elliptical cross trainer is already equipped with a heart rate receiver as standard. Using a chest strap makes it possible for you to have a wireless heart rate measuring. This optimal and ECG-precise type of measuring reads the heart rate directly from the skin through a transmitting chest strap. The chest strap then sends the impulse to the receiver integrated in the console.

Positioning the chest strap and moistening the electrodes:
Place the belt directly below the chest, while the transmitter should be placed on the middle of the chest. The chest strap should sit comfortably, but not too loose. If the belt is too loose, the contact to the electrodes may be disrupted or the belt may slip while exercising. The transmitter turns on automatically once it is put on. In order to allow for a precise measuring, you should moisten the rubber electrodes. This is best done with a special chest strap contact gel, which is also used for ultrasound scans.

Note:
If you have not been active in doing sports for a longer period of time, you should first go to your physician in order to discuss your training with them. You should also contact your physician in advance in the event of heart problems, high/low blood pressure and obesity.

Training with heart rate orientation
Heart rate orientation guarantees an extremely effective and healthy training. Through your age and the following table, you can quickly and easily read and determine the optimal pulse for your training. An alarm will sound if your heart rate exceeds the set target heart rate. Which target heart rate is important for which training goal can be found out in the following.

Fat burning (weight management): The main goal here is to burn deposits of fat. In order to achieve this training goal, a low training intensity (approximately 55% of the maximum heart rate) and a longer training period are required.

Cardiovascular training (cardio training): The primary goal is to increase stamina and fitness through an improved provision of oxygen through the cardiovascular system. In order to achieve this training goal, medium intensity (approximately 75% of the maximum heart rate) with a medium training period is required.

Anaerobic (maximum) load training: The main goal of maximum load training is to improve recovery after short, intense loads in order to be able to quickly return to the aerobic zone. In order to achieve this training goal, a high intensity (approximately 90% of the maximum heart rate) with short, intense load is required, which is followed by a recovery phase in order to prevent muscle fatigue.

Example:
For a 45-year-old man or woman, the maximum heart rate is 175 (220 - 45 = 175).

- The fat burning target zone (55%) is at approximately 96 beats/min. = (220 - age) x 0.55.
- The cardio target zone (75%) is at approximately 131 beats/min. = (220 - age) x 0.75.
- The maximum heart rate for an anaerobic load training (90%) is at approximately 157 beats/min. = (220 - age) x 0.9.

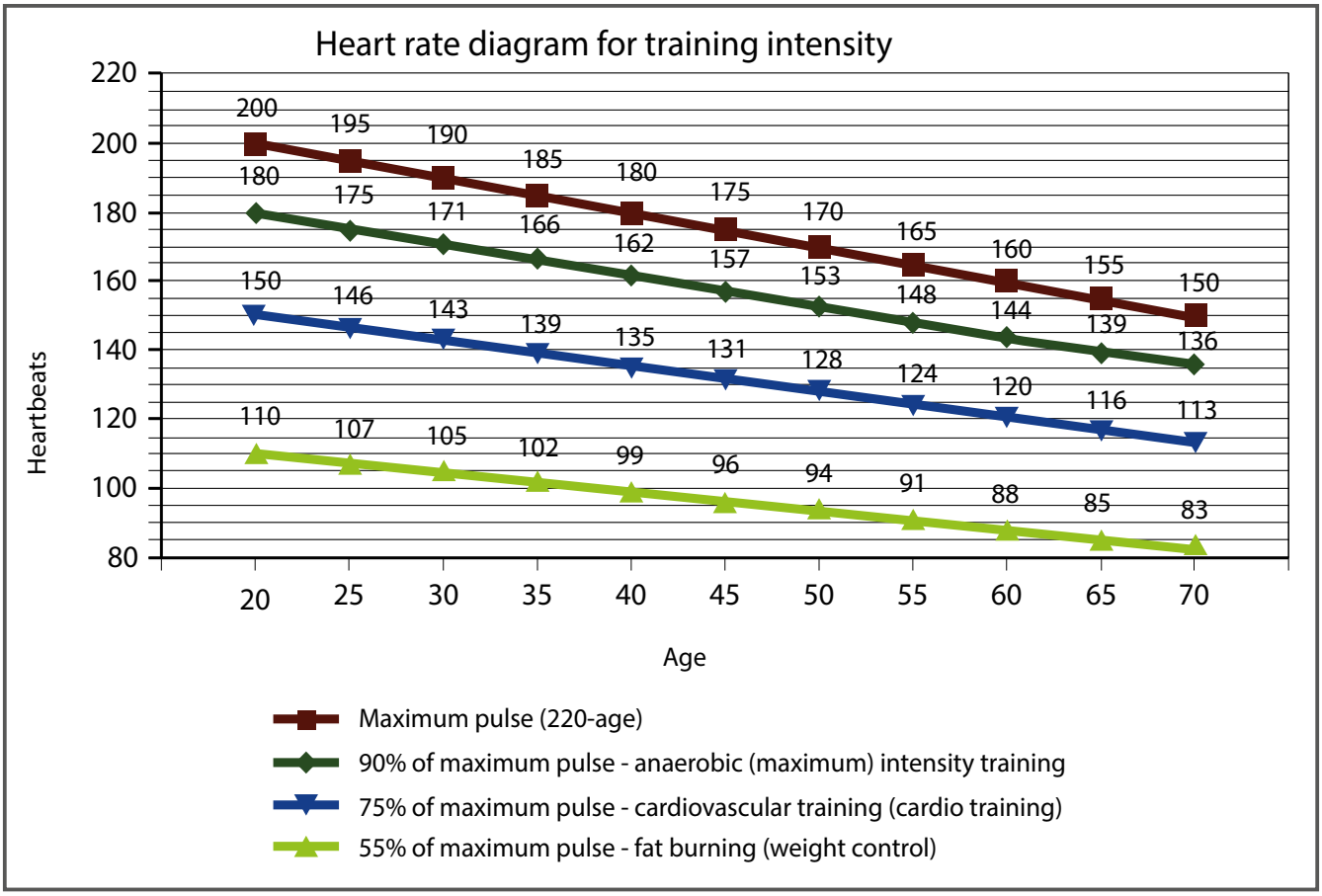

5.2 10 tips for effective elliptical cross training

1. Set goals
What would you like to achieve with your training? Weight regulation, improved stamina, prevent risk of disease, more mobility, cardiovascular training, etc. In order to achieve your long-term training goal, set individual partial goals, e. g., weekly or monthly goals.

2. Concentration on training
Try to only dedicate yourself to your training session and do not be distracted.

3. Position yourself correctly while exercising
When you execute the movement, you should start with a moderate speed and hold on if needed. The speed can then be increased gradually. The adjustment of your natural running style will occur relatively quickly. Beginners and overweight people should start with a walking program in order to not overload their joints in the beginning.

4. Correct breathing / appropriate resistance level
Do not overexert yourself physically and mentally by starting with resistance levels that are too high. Start slowly and increase the resistance steadily. Aim for regular and calm breathing.

5. Keep yourself properly hydrated
Drink, drink, drink! Have a drinking bottle close by during your workout.

6. Sufficient recovery periods
Allow your body and your muscles enough time to recover after your workout. Only a relaxed muscle will be fully operational again.

7. Choose a diversified program
Different program functions from your training console support you in doing this. For example, you can complete an interval, incline or step number training unit.

8. Creating the right workout
Every training session should have a warm-up phase, a cool-down phase and a targeted stretching. It increases physical and mental performance and prevents injuries and sore muscles.

9. Workout journal
Keep a record of your training sessions. Note the date, resting pulse, active pulse, recovery pulse, resistance level, time, distance, calories burnt and fitness level.

10. Reward yourself
Do something good for you and your body after training or after achieving a partial goal. Go to the sauna or a swimming pool. Mix a protein shake or enjoy a delicious salad.

5.3 Designing a workout

We recommend two or three workouts per week. Warm up for about five minutes before starting each workout. Finish the workout with a cool-down and targeted stretching.

Warm-up	approx. five min.	Dynamic movement of large muscle groups at a low intensity. Core body temperature increases and the metabolic process is speeded up.

WEEK 1 + 2				
	Beginner		Advanced	
Days	**Duration**	**Intensity**	**Duration**	**Intensity**
Mon	20 min.	Slow speed without resistance	30 min.	Moderate speed, keep resistance low
Wed	20 min.	Slow speed without resistance	30 min.	Moderate speed, keep resistance low
Fri	20 min.	Slow speed without resistance	30 min.	Moderate speed, keep resistance low
In the first week, increase the speed in between for two-minutes. Maintain heart rate.			In the second week, increase the speed for brief periods.	

WEEK 3 + 4				
	Beginner		Advanced	
Days	**Duration**	**Intensity**	**Duration**	**Intensity**
Mon	25 min.	Slow speed without resistance	35 min.	Vary speed, keep resistance low
Wed	25 min.	Slow speed without resistance	35 min.	Vary speed, keep resistance low

Fri	25 min.	Slow speed without resistance	35 min.	Vary speed, keep resistance low
In the third week, increase the resistance slightly.			In the fourth week, combine forwards and backwards movements.	

WEEK 5 + 6				
	Beginner		**Advanced**	
Days	**Duration**	**Intensity**	**Duration**	**Intensity**
Mon	30 min.	Moderate speed, keep resistance low	40 min.	Vary speed, keep resistance low
Wed	30 min.	Moderate speed, keep resistance low	40 min.	Vary speed, keep resistance low
Fri	30 min.	Moderate speed, keep resistance low	40 min.	Vary speed, keep resistance low
In the fifth week, increase the resistance slightly at moderate speed.			In the sixth week, alternate between forwards and backwards movements.	

WEEK 7 + 8				
	Beginner		**Advanced**	
Days	**Duration**	**Intensity**	**Duration**	**Intensity**
Mon	35 min.	Vary speed, keep resistance low	45 min.	Vary speed, increase resistance
Wed	35 min.	Vary speed, keep resistance low	45 min.	Vary speed, increase resistance
Fri	35 min.	Vary speed, keep resistance low	45 min.	Vary speed, increase resistance
In the seventh week, include short sprints.			In the eighth week, alternate between forwards and backwards movements.	

Cool-down approximately 5 min. Finish your training at low resistance and at slow speed. Allow your body to gently slow back down.

5.4 Stretching exercises for leg & chest muscles

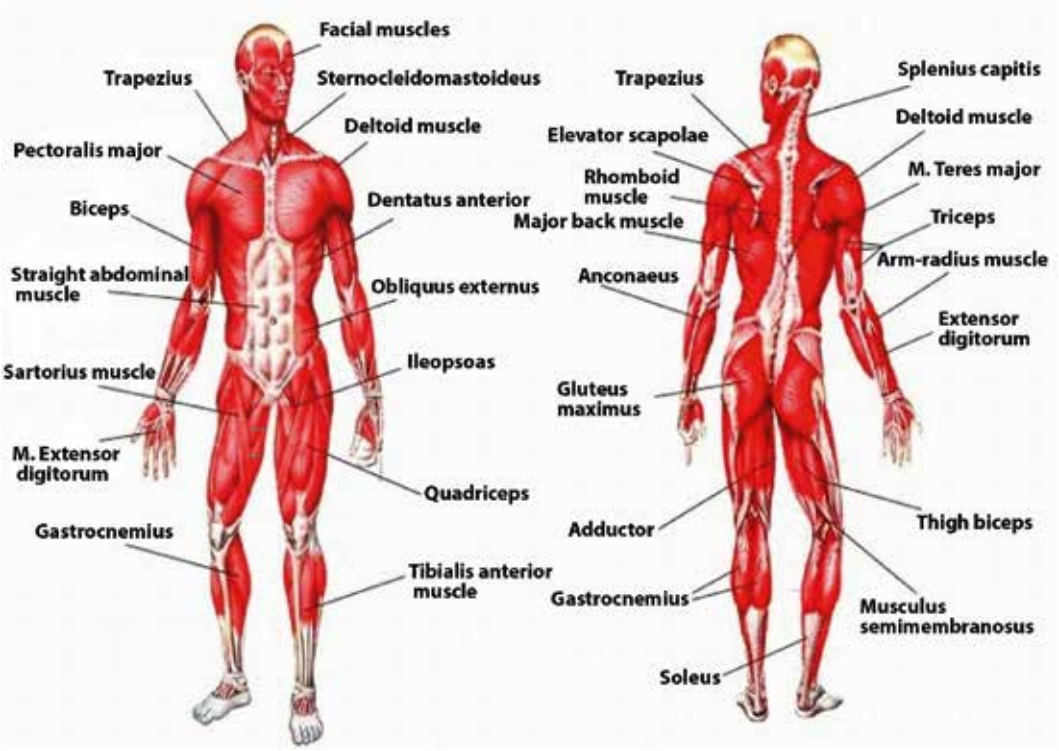

1. Exercise: Stretching of front thigh / leg extension (quadriceps)

- Stable position, grab arches of feet
- Pull heel towards buttocks, knee points downwards (no abduction)
- Straight upper body, avoid tilting the pelvic forward (hollow back) by tensing the abdominal muscles
- Change legs

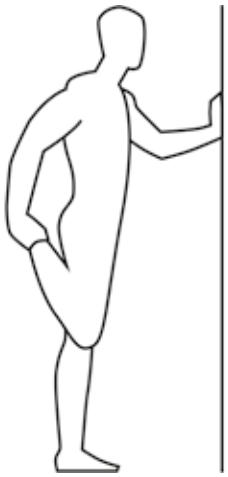

2. Exercise: Stretching the back thigh / leg curl (hamstring)

- Pull thigh towards upper body with both hands
- Stretch through increased stretching in the knee joint
- The lower leg maintains contact with the floor, keep hips bent
- Change legs

3. Exercise: Stretching the calf muscles (gastrocnemius)

- Place feet parallel to each other pointing forward, the heels touch the floor
- Support yourself on a chair coming from a lunge
- Move your body weight to the front leg, press your heel from the rear leg towards the floor and hold the contact
- Slowly stretch your knee of the rear leg until you feel the stretch in your calves
- Change legs

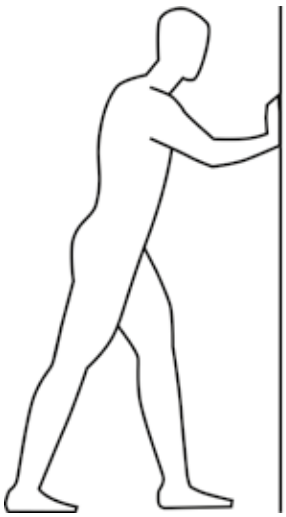

4. Exercise: Stretching the chest muscles (pectoralis major)

- Stand parallel to a wall
- Place your forearm at 90° to the wall with the elbow just above shoulder height
- Turn your head and upper body gradually to the opposite sides until you feel a stretch in the front chest, of the shoulder being leaned on
- Pay attention to tension in your abdominal and gluteal muscles
- Your weight is on your front leg
- Change legs

All recommendations of these instructions apply solely to healthy persons and are not suitable for those with heart or cardiovascular problems. All of the tips are intended only as a guide to help you create a workout. Your physician can offer appropriate advice for particular, personal requirements.

We hope you enjoy your workout and have a lot of success!

5.5 Workout journal

(Copy template)

Date | Distance | Time (min.) | Resistance level | Training weight | Ø Pulse | Calories burnt | I feel ... | Body weight

Taurus training fitness equipment is subject to strict quality controls. However, if a fitness equipment purchased from us does not work perfectly, we take it very seriously and ask you to contact our customer service as indicated. We are happy to help you by phone via our service hotline.

Error descriptions
Your fitness equipment is developed for long-term, high-quality training. However, should a problem arise, please first read the operating instructions. For further assistance, please contact your contract partner or call our service hotline. To ensure your problem is solved as quickly as possible, please describe the defect as exactly as possible.

In addition to the statutory warranty, we provide a warranty for every fitness equipment purchased from us according to the following provisions.

Your statutory rights are not affected.

Warrantee
The warrantee is the first/original buyer and/or any person who received a newly purchased product as a gift from the original buyer.

Warranty periods
The following warranty periods begin on delivery of the fitness equipment.

Model	Use	Full warranty	Frame
X7.7	Home use	24 months	30 years
	Semiprofessional use	12 months	

Repair costs
According to our choice, there will either be a repair, a replacement of individual damaged parts or a complete replacement. Spare parts, that have to be mounted while assembling the equipment, have to be replaced by the warrantee personally and are not a part of repair. After the expiration of the warranty period for repair costs, a pure parts warranty applies, which does not include the repair, installation and delivery costs.

The terms of use are defined as follows:

- Home use: solely for private use in private households up to 3 hours per day
- Semi-professional use: up to 6 hours per day (e. g. rehabilitation centers, hotels, clubs, company gyms)
- Professional use: more than 6 hours per day (e. g. commercial gyms)

Warranty service
Within the warranty period, equipment which develops faults as a result of material or manufacturing defects, will be repaired or replaced at our discretion. Ownership of equipment or parts of equipment which have been replaced is transferred to us. The warranty period is not extended nor does a new warranty period begin following repair or replacement under the warranty.

Warranty conditions
For the warranty to be valid, the following steps must be taken:

Please contact our customer service by email or phone. If the product under warranty has to be sent in for repair, the seller bears costs. After expiry of the warranty, the buyer bears the costs of transport and insurance. If the fault is covered by our warranty, you will receive a new or repaired equipment in return.

Warranty claims are invalid in case of damage resulting from:
- misuse or improper handling
- environmental influences (moisture, heat, electrical surge, dust, etc.)
- failure to follow the current safety measures for the equipment
- failure to follow the operating instructions
- use of force (e. g. hitting, kicking, falling)
- interventions which were not carried out by one of our authorized service centers
- unauthorized repair attempts

Proof of purchase and serial number
Please make sure that you are able to provide the appropriate receipt when claiming on your warranty. So that we can clearly identify the model of your equipment, and for the purposes of our quality control, you will need to give the serial number of your equipment, when contacting the service team. Where possible please have your serial number and your customer number ready when you call our service hotline. It will help us to deal with your request swiftly.

If you have trouble finding the serial number on your fitness equipment, our service team is at your disposal to offer further information.

Service outside the warranty period
We are also happy to issue an individual cost estimate if there is a problem with your fitness equipment after the warranty has expired, or in cases which do not fall under the terms of the warranty, e. g. normal wear and tear. Please contact our customer service team to find a quick and cost-effective solution to your problem. In such a case you will be responsible for the delivery costs.

Communication
Many problems can be solved just by speaking to us as your contract partner. We know how important it is to you as a user of the fitness equipment to have problems solved quickly and simply, so you can enjoy working out with minimal interruption. For that reason, we also want to resolve your queries quickly and in a straightforward manner. Thus, please always keep your customer number and the serial number of the faulty equipment handy.

7 DISPOSAL

At the end of its operational life, this equipment cannot be disposed of in normal household waste. Instead, it must be disposed of via an electricals recycling centre. Further information can be obtained from your local authority's recycling service.

The materials can be recycled as per their symbols. Through the reuse, recycling of materials or other forms of recovery of old equipment, you make an important contribution to the protection of the environment.

	Sport-Tiedje floor mat XL Art. No. ST-FM-XL
	Sport-Tiedje transmitter chest strap Art. No. ST1000
	Sport-Tiedje Komfort chest strap Premium Art. No. ST1050
	Chest strap electrode gel 250ml Art. No. BK-250
	Fitness equipment care set Art. No. HF-500

9.1 Service hotline

So that we can give you the best possible service, please have your **model name, part number, serial number, exploded drawing and parts list** ready.

SERVICE-HOTLINE

DE

+49 4621 4210-0
+49 4621 4210-699
service@sport-tiedje.de
Mo. - Fr. 8:00 - 18:00
Sa. 9:00 - 18:00

DK

80 90 16 50
+49 4621 4210-945
info@t-fitness.dk
Ma. - Fr. 8:00 - 18:00
Lø. 9:00 - 18:00

FR

+33 (0) 172 770033
+49 4621 4210-933
service-france@sport-tiedje.fr
Lun. - Ven. 8:00 - 18:00
Sam. 9:00 - 18:00

NL

+31 172 619961
info@fitshop.nl
Ma. - Do. 9:00 - 17:00
Vr. 9:00 - 21:00
Za. 10:00 - 17:00

UK

+44 141 876 3972
orders@powerhousefitness.co.uk
Mon. - Fri. 9:00 - 17:00

INT

+49 4621 4210-0
service-int@sport-tiedje.de
Mon - Fri 8:00 - 18:00
Sat 9:00 - 18:00

9.2 Serial number and model name

Before assembling your equipment, find the serial number on the white sticker and enter it in the appropriate space.

Serial number:

Brand / category:	Model name:
Taurus elliptical cross trainer	X7.7

9.3 Parts list

No	Qty.	Part number	Description
(A) Main Frame and Assembly Fittings			
A01	1	JEA2-A1001	Frame Assembly
A02	1	EA1-C1001	Grank Set Assembly
A03	1	JEA1-D1002	Idler Wheel Assembly
A04	1	PCT-002-1	Belt Wheel(big) Φ310<J8 for belt>, including sensor magnet NF-061
A05	4	SGA8-20I	CKS Hex Screw M8xP1.25x20
A06	4	SOC8	Nylon Nut M8xP1.25
A07	1	CA-490J8	Belt 49" J8
A08	1	NS-122	Idler Wheel Spring
A09	4	GH-6204ZZ	Bearing 6204ZZ
A10	1	SRA20	C Shaped Ring for Φ20 Post
A11	1	NT-1633	Inner Belt Wheel Bushion
A12	1	SK-469	M20xP1.0 Nylon Nut
A13	1	NFW-004(NT-1683)	Generator Φ242 small belt wheel Φ30 10J B600321A (including post cover)
A14	4	SGA6-20	CKS Hex Screw M6xP1.0x20
A15	4	SPB6	Spring Washer M6
A16	4	SPA060-130-10	Washer Φ6xΦ13x1.0t
A17	3	NT-1489	IDLER PAD
A18	3	SIA5-15IL	Counter Sink Hex Screw M5xP0.8x15 blue nylok
A19	1	SGA8-25I	CKS Hex Screw M8xP1.25x25
A20	1	SGA8-30I	CKS Hex Screw M8xP1.25x30
A21	1	XRB-037-003	Lower PC board 040901
A22	2	SAE5-12	Round Head Philips Screw M5xP0.8x12
A23	6	BJ-48-330B	binding 4.8X330mm black
A24	1	BJ-22-080B	binding 2.2X80mm black
A25	1	BJ-36-102B	binding 3.6X102mm black
A26	1	DFA017-035-0080	HDR Foam GripΦ17xΦ24x80mm
A30	1	NT-2439	crankshaft socket
(B) Front Base Tube Assembly (1 set)			
B01	1	JEB1-B1001	Front Base Tube Assembly

No	Qty.	Part number	Description
B02	2	PCB-75-001	outside cover tube Ø75 ⊠⊠(FC012)
B03	2	NT-2318	Long Allen Nut
B04	2	SDA8-45	Truss Hex Screw M8xP1.25x45
B05	2	SOC8	Nylon Nut M8xP1.25
B06	2	SPA080-160-20	Washer Φ8xΦ16x2.0t
B07	2	PB-01-002	Bearing wheel (non-bearing)Φ70XΦ8X28t
(C) Cover (1 set)			
C01	1	P-1506L	Left Frame Cover
C02	1	P-1506R	Right Frame Cover
C03	2	NO-3141	Plastic Iron Fixing Plate
C04	1	NO-3141A	Plastic Iron Fixing Plate-short
C05	2	SPA060-160-10	WasherΦ6xΦ16x1.0t
C06	10	SCA5-10	Truss Philips Screw M5xP0.8x10
C07	2	SCA5-12	Truss Philips Screw M5xP0.8x12
C08	4	SCI5-12	Truss Philips Self Tapping Screw Φ5x12
(D) Turn Plate Cross Fittings (1 set)			
D01	2	JEA1-G1001	Turn Plate Cross Assembly
D02	2	P-1504	Plastic Turn Plate
D03	16	SCI5-15	Truss Philips Self Tapping Screw Φ5x15
D04	2	SOB14-P15-10T	Nut(washer shaped) M14xP1.5x10t
D05	2	P-1505	Turn Plate Cover
(E) Rear Leg Tube Assembly (1 set)			
E01	1	JED5-I1002	Rear Leg Tube Assembly
E02	2	SOA8	Allen Nut M8xP1.25
E03	4	P-1820	Adjustment Foot Pad
E04	2	PCB-75-001	Outside cover tube Φ75 (FC012)
E05	1	P-1972	Rear Leg Tube Cover
E06	4	PCA-1-1/2-003	Flat cover tube φ1-1/2"x2.0t (BC-218-1)
E07	3	SK-463	CKS hex screw M10xP1.5x40 blue nylok
E08	3	SPB10	Spring washer M10
E09	3	SPA100-200-15	Flat washer Φ10xΦ20x1.5t
E10	2	SCA4-15	Truss philips screw M4xP0.7x15
E11	2	AAL208E0620-001	Wheel Plate

No	Qty.	Part number	Description
E12	4	SDA8-15	Truss hex screw M8XP1.25X15
E13	4	SOC8	Nylon nut M8
E14	4	BAA0600-250-15	Foam 600mmx25mmx1.5t
(F) Iron Stabilizer Tube and Fittings (1 set)			
F01	2	JEA3-M1001	Iron Stabilizer Tube Assembly
F02	16	GH-6003ZZ	Bearing 6003ZZ
F03	2	NT-1557	Wheel Fixing Bushion
F04	8	A4B020E00072-001	Post<short> Φ18XΦ23.7X7.2
F05	2	SPG170-240-03	Wave Washer Φ17xΦ24x0.3t
F06	2	SK-443	Fixing Screw M8XP1.25X135 <-15>
F07	4	SOC8	Nylon Nut M8xP1.25
F08	4	P-1728B	PU Wheel Φ74X44
F09	2	JEA1-J1001	Front Pedal Fixing Plate Assembly
F10	2	SGA8-85IL	CKS Hex Screw M8XP1.25X85<=30mm> blue nylok
F11	4	NO-2014	Arc Washer
F12	2	NT-1560	Plastic Core of Iron Stabilizer Tube
F13	2	P-1516L	Left Wheel Cover
F14	2	P-1516R	Right Wheel Cover
F15	4	SCA4-15	Truss Philips Screw M4xP0.7x15
F16	2	SDA8-15L	Truss Hex Screw M8xP1.25x15-blue nylok
F17	2	SPA080-250-20	Washer Φ8xΦ25x2.0t
F18	2	SPG170-240-03	Wave washer Φ17xΦ24x0.3t
(G) Upper Control Tube Set (1 set)			
G01	1	(G) Upper Control Tube Set	Upper Frame Assembly
G02	2	SGA10-70I	CKS Hex Screw M10xP1.5x70
G03	1	SGA8-15I	CKS Hex Screw M8xP1.25x15
G04	2	SOC10	Nylon Nut M10xP1.5
G05	1	SPA080-250-20	Washer Φ 8x Φ 25x2.0t
G06	2	BE-0300	Binding L=300 black
(H) Contact Hand Pulse Set (1 set)			
H01	4	P-1080	Hand Pulse Sensor Base
H02	4	NO-2432	Hand Pulse Sensor Plate
H03	4	BAC0750-250-03	Double Sided Tape 25mmx75mmx0.3t

No	Qty.	Part number	Description
H04	4	SAA3-30	Round Head Philips Screw M3xP0.5x30
H05	4	SOA3	Allen Nut M3xP0.5
H06	2	P-1712	Tube End-Φ1-1/4"
(I) Handrail Set (1 set)			
I01	1	JEA2-Q2001	Left Handrail Tube Assemly
I02	1	JEA2-Q1001	Right Handrail Tube Assemly
I03	4	GH-6305VV	Bearing 6305VV
I04	1	JEB1-Q2001	Left Upper Handrail Tube
I05	1	JEB1-Q2002	Right Upper Handrail Tube
I06	2	PFA-031-03-970	HDR Foam GripΦ31X3.0tX970 (left&right)
I07	2	P-1712	Tube Cap-Φ1-1/4"
I08	2	SDA8-15L	Truss Hex Screw M8xP1.25x15-blue nylok
I09	2	SPA085-300-20	Flat washer Φ8.5XΦ30X2.0t
I10	4	SNA8-45	Screw M8XP1.25X45
I11	4	SOC8	Nylon Nut M8xP1.25
I12	4	SPG264-342-03	Wave washer 26.4x34.2x0.3t
(J) Connecting Rod Set (1 set)			
J01	1	JEA2-R1001	Right Connecting Rod Assembly
J02	1	JEA2-R2001	Left Connecting Rod Assembly
J03	2	GH-POS12-R	Universal Post-POS12-R(Φ12)
J04	4	SOC12	Nylon Nut M12xP1.75
J05	2	BAA0900-900-30	Foam Sticker 90X90X3.0t (one side plastic)
J06	2	NT-1483	Axle
J07	4	SGA8-15L	CKS Hex Screw M8XP1.25X15 blue nylok
J08	2	P-1651	Plastic Washer
J09	4	P-1393	Tube End
J10	4	SPA085-190-20	Washer Φ8.5xΦ19x2.0t
J11	2	SGA12-40I	CKS Hex Screw M12xP1.75x40
J12	2	SGA6-10L	CKS Hex Screw blue nylok M6xP1.0x10
(K) Plastic Attachments (1 set)			
K01	1	P-1507	Middle Frame Cover
K02	1	P-2564	Left Pedal Steel Plastic
K03	1	P-2565	Right Pedal Steel Plastic

No	Qty.	Part number	Description
K04	1	P-2559	Handle bar front plastic (Left)
K05	1	P-2558	Handle bar rear plastic (Left)
K06	1	P-2561	Handle bar front plastic (Right)
K07	1	P-2560	Handle bar rear plastic (Right)
K08	2	P-2566	Left Tube Plastic
K09	2	P-2567	Right Tube Plastic
K10	2	P-1519	Pedal <ABS+TPR>
K11	1	P-2562	Upright Tube Shroud
K12	8	SCI5-15	Truss Philips Self Tapping Screw Φ5x15
K13	6	SCA4-15	Truss Philips Screw M4xP0.7x15
K14	8	SCA5-10SL	Truss Philips Screw M5xP0.8x10 Stainless Steel, blue nylok
K15	8	SPA060-130-10S	Washer Φ6xΦ13x1.0t Stainless Steel
K16	1	SCA5-10	Truss Philips Screw M5xP0.8x10
(L) Computer Console & Wires (1 set)			
L01	1	HEA1-T1006-1	Computer Console(including XL-502 upper hand pulse wire & XL-423 upper controller
L02	4	SOG6	Nut Cap M6XP1.0
L03	4	SPA060-130-10	Nut Cap M6XP1.0
L04	2	XL-270	upper hand pulse wire<lower> handpulse sensor wire 720mm
L05	1	XL-424	Controller Wire <Middle>
L06	1	XL-504	Controller Wire <Down>
L07	1	XL-426	Flywheel Control Cable (A)
L08	1	XL-505	Flywheel Control Cable
(M) Other Fittings (1set)			
M01	1	HED5-Y1001	Part Bag
M02	1	P-2119	Bottle Holder
M03	1	P-540D	Bottle Holder Base
M04	2	SCA6-15	Truss philips screw M6xP1.0x15
M05	2	SPA060-130-10	Washer ψ6xψ13x1.0t
M06	1	P-1646	monitor decorative cover
M07	4	SCA4-8	Truss philips screw M4xP0.7x8
M08	4	BE-0300	Binding L=300 black

9.4 Exploded drawing

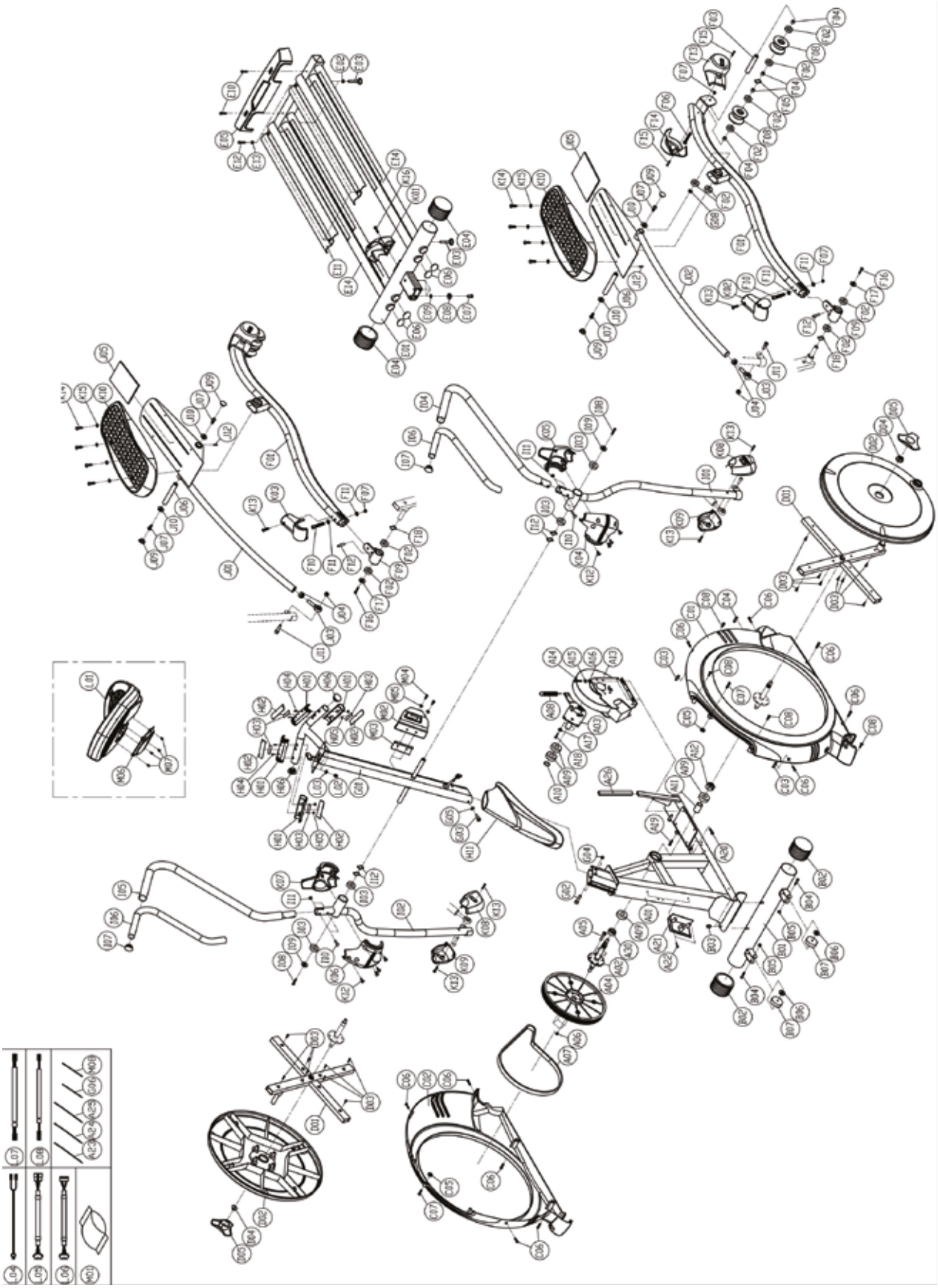

CONTACT

Company head office
Sport-Tiedje GmbH
Flensburger Str. 55
24837 Schleswig
Germany

Hotline for Technical Information

DE	DK	FR
+49 4621 4210-0	80 90 16 50	+33 (0) 172 770033
+49 4621 4210-698	+49 4621 4210-945	+49 4621 4210-933
technik@sport-tiedje.de	info@t-fitness.dk	service-france@sport-tiedje.fr

NL	UK	INT
+31 172 619961	+44 141 876 3986	+49 4621 4210-0
info@fitshop.nl	support@powerhousefitness.co.uk	service-int@sport-tiedje.de

www.sport-tiedje.com
www.taurus-fitness.de

DISCLAIMER

Product and instructions are subject to change. Technical data can be changed without advance notice.

Please find a detailed overview including address and opening hours for all specialist fitness stores of the Sport-Tiedje Group in Germany and abroad on the following website.

www.sport-tiedje.com/en/stores

Notes

Notes

TAURUS

Elliptical cross trainer X7.7