ELEVATION™ SERIES FLEXSTRIDER® VARIABLE-STRIDE TRAINER

ASSEMBLY INSTRUCTIONS

M051-00K97-0001 REV A



Life Fitness
WHAT WE LIVE FOR

CORPORATE HEADQUARTERS

Columbia Centre III, 9525 West Bryn Mawr Avenue, Rosemont, Illinois 60018 • U.S.A.
847.288.3300 • FAX: 847.288.3703
Service phone number: 800.351.3737 (toll-free within U.S.A., Canada)
Global Website: www.lifefitness.com

INTERNATIONAL OFFICES

AMERICAS

North America
Life Fitness, Inc.

Columbia Centre III
9525 West Bryn Mawr Avenue
Rosemont, IL 60018 U.S.A
Telephone: (847) 288 3300
Fax: (847) 288 3703
Service Email: *customersupport@lifefitness.com*
Service Website: *www.lifefitness.com/parts*
Sales/Marketing Email:
commercialsales@lifefitness.com
Operating Hours: 7:00 am-6:00 pm (CST)

Brazil
Life Fitness Brasil

Av. Cidade Jardim, 900
Jd. Paulistano
São Paulo, SP 01454-000
BRAZIL
SAC: 0800 773 8282
Telephone: +55 (11) 3095 5200
Fax: +55 (11) 3095 5201
Service Email: *suporte@lifefitness.com.br*
Sales/Marketing Email: *lifefitness@lifefitness.com.br*
Service Operating Hours:
9:00 - 17:00 (BRT) (Monday-Friday)
Store Operating Hours:
9:00 -20:00 (BRT) (Monday-Friday)
10:00 - 16:00 (BRT) (Saturday)

Latin America & Caribbean*
Life Fitness Inc.

Columbia Centre III
9525 West Bryn Mawr Avenue
Rosemont, IL 60018 U.S.A
Telephone: (847) 288 3300
Fax: (847) 288 3703
Service Email: *customersupport@lifefitness.com*
Sales/Marketing Email:
commercialsales@lifefitness.com
Operating Hours: 7:00am-6:00pm (CST)

EUROPE, MIDDLE EAST, & AFRICA (EMEA)

Netherlands & Luxemburg
Life Fitness Atlantic BV

Bijdorpplein 25-31
2992 LB Barendrecht
THE NETHERLANDS
Telephone: (+31) 180 646 666
Fax: (+31) 180 646 699
Service Email: *service.benelux@lifefitness.com*
Sales/Marketing Email:
marketing.benelux@lifefitness.com
Operating Hours: 9.00h-17.00h (CET)

United Kingdom & Ireland
Life Fitness UK LTD

Queen Adelaide
Ely, Cambs, CB7 4UB
Telephone: General Office (+44)
1353.666017
Customer Support (+44) 1353.665507
Fax: (+44) 1353.666018
Service Email: *uk.support@lifefitness.com*
Sales/Marketing Email: *life@lifefitness.com*
Operating Hours:
General Office: 9.00am - 5.00pm (GMT)
Customer Support: 8.30am - 5.00pm (GMT)

Germany & Switzerland
Life Fitness Europe GMBH

Siemensstraße 3
85716 Unterschleißheim
GERMANY
Telephone: (+49) 89.31 77 51.0 (Germany)
(+41) 0848 000 901 (Switzerland)
Fax: (+49) 89.31 77 51.99 (Germany)
(+41) 043 818 07 20 (Switzerland)
Service Email: *kundendienst@lifefitness.com*
Sales/Marketing Email:
kundenberatung@lifefitness.com
Operating Hours: 08.30 -16.30h (CET)

Austria
Life Fitness Austria

Vertriebs G.m.b.H.
Dückegasse 7-9/3/36
1220 Vienna
AUSTRIA
Telephone: (+43) 1.61.57.198
Fax: (+43) 1.61.57.198.20
Service Email: *kundendienst@lifefitness.com*
Marketing/Sales Email:
kundenberatung@lifefitness.com
Operating Hours: 08:30-16.30.h (MEZ)

Spain
Life Fitness IBERIA

C/Frederic Mompou 5,1º1ª
08960 Sant Just Desvern Barcelona
SPAIN
Telephone: (+34) 93.672.4660
Fax: (+34) 93.672.4670
Service Email: *servicio.tecnico@lifefitness.com*
Sales/Marketing Email: *info.iberia@lifefitness.com*
Operating Hours:
9.00h-18.00h (Monday-Thursday)
8.30h-15.00h (Friday)

Belgium
Life Fitness Benelux NV

Parc Industrial de Petit-Rechain
4800 Verviers
BELGIUM
Telephone: (+32) 87 300 942
Fax: (+32) 87 300 943
Service Email:*service.benelux@lifefitness.com*
Sales/Marketing Email:
marketing.benelux@lifefitness.com
Operating Hours: 9.00h -17.00h (CET)

All Other EMEA Countries &
Distributor Business C-EMEA*

Bijdorpplein 25-31
2992 LB Barendrecht
THE NETHERLANDS
Telephone: (+31) 180 646 644
Fax: (+31) 180 646 699
Service Email: *service.db.cemea@lifefitness.com*
Sales/Marketing Email:
marketing.db.cemea@lifefitness.com
Operating Hours: 9.00h-17.00h (CET)

ASIA PACIFIC (AP)

Japan
Life Fitness Japan

Japan Nippon Brunswick Bldg., #8F
5-27-7 Sendagaya
Shibuya-Ku, Tokyo
Japan 151-0051
Telephone: (+81) 3.3359.4309
Fax: (+81) 3.3359.4307
Service Email: *service@lifefitnessjapan.com*
Sales/Marketing Email:*sales@lifefitnessjapan.com*
Operating Hours: 9.00h-17.00h (JAPAN)

China and Hong Kong
Life Fitness Asia Pacific LTD

Room 2610, Miramar Tower
132 Nathan Road
Tsimshatsui, Kowloon
HONG KONG
Telephone: (+852) 2891.6677
Fax: (+852) 2575.6001
Service Email: *HongKongEnquiry@lifefitness.com*
Sales/Marketing Email:
ChinaEnquiry@lifefitness.com
Operating Hours: 9.00h-18.00h

All Other Asia Pacific countries &
distributor business Asia Pacific*

Room 2610, Miramar Tower
132 Nathan Road
Tsimshatsui, Kowloon
HONG KONG
Telephone: (+852) 2891.6677
Fax: (+852) 2575.6001
Service Email: *HongKongEnquiry@lifefitness.com*
Sales/Marketing Email:
ChinaEnquiry@lifefitness.com
Operating Hours: 9.00h-18.00h

Also check www.lifefitness.com for local representation or distributor/dealer

Table of Contents

Section	Page
1. Important Safety Instructions	3
2. FlexStrider Variable-Stride Trainer Overview	7
3. Initial Setup	8
4. Service and Technical Data	10
4.1 Preventive Maintenance Tips	10
4.2 Preventive Maintenance Schedule	11
4.3 How to Obtain Product Service	11
5. Assembly	12
5.1 Component List and Hardware	12
6. Specifications	24
6.1 Elevation Series FlexStrider Variable-Stride Trainer	24
7. Warranty	25

Operation Manuals and other Product Information available at
https://www.lftechsupport.com/web/document-library/documents

© 2014 Life Fitness, A division of Brunswick Corporation. All Rights Reserved. Life Fitness is a registered trademark of Brunswick Corporation. Fitlinxx is a trademark of Fitlinxx, Inc. Polar is a registered trademark of Polar Electro, Inc. iPod® and iPhone® are registered trademarks of Apple, Inc. Gym Wipes® is a registered trademark of The 2XL Corporation. PureGreen 24 is a trademark of Pure Green.

1 IMPORTANT SAFETY INSTRUCTIONS

Read all instructions before using the Life Fitness FlexStrider.

⚠CAUTION: Any changes or modifications to this equipment could void the product warranty.

- **DANGER:** To reduce the risk of electrical shock, always unplug this Life Fitness product before cleaning or attempting any maintenance activity.
- **WARNING:** To reduce the risk of burns, fire, electric shock, or injury, it is imperative to connect each product to a properly grounded electrical outlet. See *Grounding Instructions*.
- **WARNING:** Heart rate monitoring systems may be inaccurate. Over exercising may result in serious injury or death. If you feel faint, stop exercising immediately.
- **WARNING:** Keep a distance of at least 2 feet (0.6 m) behind and on each side of the Life Fitness FlexStrdier clear of any obstructions, including walls, furniture, and other equipment.
- The product should never be left unattended when plugged in. Disconnect from the electrical outlet when not in use, and before putting on or taking off parts. To disconnect, remove plug from electrical outlet.
- Never operate a Life Fitness product if it has a damaged power cord or electrical plug, or it has been dropped, damaged, or even partially immersed in water. Contact Life Fitness Customer Support Services.
- Position the product so that the power cord plug to the wall is accessible to the user. Make sure that the power cord is not knotted or twisted and that it is not trapped under any equipment or other objects.
- If the electrical supply cord is damaged, it must be replaced by the manufacturer, an authorized service agent, or a similarly qualified person to avoid a hazard.
- Always follow the console instructions for proper operation.
- This appliance is not intended for use by persons (including children) with reduced physical, sensory, or mental capabilities, or lack of experience or knowledge unless they have supervision or been given instruction concerning the use of the appliance by a person responsible for their safety.
- Do not use this product outdoors, near swimming pools or in areas of high humidity.
- Never operate a Life Fitness product with the air openings blocked. Keep air openings free of lint, hair, or any other obstructing material.
- Never insert objects into any opening in these products. If an object should drop inside, unplug the power cord from the outlet, and carefully retrieve it. If the item cannot be reached, contact Life Fitness Customer Support Services.
- Never place liquids of any type directly on the unit, except in an accessory tray or holder. Containers with lids are recommended.
- Do not use this product in bare feet. Always wear shoes. Wear shoes with rubber or high-traction soles. Do not use shoes with heels, leather soles, cleats or spikes. Make sure no stones are embedded in the soles.
- Keep children away from the Life Fitness FlexStrider.
- Keep all loose clothing, shoelaces, and towels away from moving parts.
- Do not reach into, or underneath, the unit or tip it on its side during operation.

- Do not allow other people to interfere in any way with the user or equipment during a workout.
- Allow LCD consoles to “normalize” with respect to temperature for one hour before plugging the unit in and using.
- Use these products for their intended use as described in this manual. Do not use attachments that have not been recommended by the manufacturer.
- Keep the power cord away from heated surfaces. Do not pull the equipment by the power cord as a handle. Do not run the power cord on the floor under or along the side of the FlexStrider. Refer to Steps 4 and 7 for proper power cord routing.
- Handrails may be held to enhance stability as needed, but are not for continuous use.
- Read all warnings on the product prior to starting a workout.
- If warnings are missing or damaged, please contact Life Fitness immediately for replacement warning labels. Warning labels are shipped with every product and should be installed before product is used. Life Fitness is not responsible for missing or damaged warning labels.

SAVE THESE INSTRUCTIONS FOR FUTURE REFERENCE.

Consignés De Sécurité Importantes

AVERTISSEMENT: Lire toutes les instructions avant d'utiliser le tapis roulant.

AVERTISSEMENT: Des systèmes de surveillance de fréquence cardiaque peuvent être inexacts. Trop d'exercices peuvent entraîner des blessures sérieuses, voire mortelles. En cas de sensation d'évanouissement, arrêter immédiatement l'entraînement.

AVERTISSEMENT: Pour réduire les risques de brûlures, d'incendies, de décharges électriques ou de blessures, chaque appareil doit absolument être branché sur une prise électrique correctement mise à la terre.



CONSIGNE DE SÉCURITÉ : pour un emploi sûr, le produit doit être inspecté régulièrement afin de s'assurer qu'il n'est pas usé ni endommagé. Consultez la section de Maintenance préventive pour obtenir deplus amples informations.



AVERTISSEMENT: Des systèmes de surveillance de fréquence cardiaque peuvent être inexacts. Trop d'exercices peuvent entraîner des blessures sérieuses, voire mortelles. En cas de sensation d'évanouissement, arrêter immédiatement l'entraînement.

- Cet appareil ne doit être employé que pour l'usage auquel il est destiné, conformément aux directives du manuel.
- Les instructions de la console doivent toujours être suivies pour obtenir un fonctionnement correct.
- Cet appareil n'est pas prévu pour être utilisé par des personnes (y compris les enfants) dont les capacités physiques, sensorielles ou mentales sont réduites, ou des personnes dénuées d'expérience ou de connaissance, sauf si elles ont pu bénéficier, par l'intermédiaire d'une personne responsable de leur sécurité, d'une surveillance ou d'instructions préalables concernant l'utilisation de l'appareil.
- Les enfants doivent faire l'objet d'une surveillance afin de veiller à ce qu'ils ne jouent pas avec l'appareil.
- Ne jamais rien insérer dans les ouvertures de cet appareil. Si un objet tombe à l'intérieur de l'appareil, couper l'alimentation électrique, débrancher le cordon de la prise et le récupérer avec précaution. S'il est impossible de l'atteindre, communiquer avec le service à la clientèle de LIFE FITNESS.
- Ne jamais placer aucun liquide directement sur l'appareil, sauf dans le plateau pour accessoires ou un support prévu à cet effet. Il est recommandé d'utiliser des conteneurs munis de couvercles.
- Ne pas utiliser ce produit à l'extérieur, près d'une piscine ou dans des endroits très humides.
- Éloigner les vêtements lâches, les lacets et les serviettes des pièces en mouvement.
- Maintenez la zone autour du produit Life Fitness exempte d'obstructions, y compris de murs et de meubles.
- Procédez avec précaution lors du montage ou du démontage du produit.
- Ne jamais faire fonctionner un produit Life Fitness dont la fiche ou le cordon d'alimentation est endommagé, ni aucun appareil qui serait tombé ou aurait été endommagé ou même partiellement plongé dans l'eau. Appeler le service clientèle de Life Fitness.
- Tenir le cordon d'alimentation à l'écart de toute surface chauffée. Ne pas tirer l'appareil par le cordon d'alimentation; ne pas utiliser le cordon comme poignée.
- Ne pas utiliser cet appareil pieds nus. Toujours porter des chaussures. Porter des chaussures avec des semelles en caoutchouc ou fournissant une très bonne adhérence. Ne pas utiliser de chaussures à talons, à semelles en cuir ou munies de crampons.
- Ne faites pas basculer l'appareil sur le côté tandis qu'il fonctionne.
- Garder les mains et les pieds de toutes des pièces en mouvement.
- Cet appareil ne doit être employé que pour l'usage auquel il est destiné, conformément aux directives du manuel. Ne pas utiliser d'accessoires qui ne sont pas recommandés par le fabricant.
- Utilisez cet appareil dans un endroit bien ventilé.
- L'équipement doit être installé sur une base stable et être correctement mis de niveau.
- Assurez-vous que tous les composants sont bien fixés.

- L’appareil ne doit jamais être laissé sans surveillance lorsqu’il est branché. Débranchez de la prise lorsque vous ne l’utilisez pas, et avant de mettre le ou le décollage pièces.
- Ne pas faire fonctionner sous une couverture ou un oreiller. Trop de chauffage peuvent survenir et causer un incendie, une électrocution ou des blessures aux personnes.
- Ne jamais faire fonctionner un produit Life Fitness dont la fiche ou le cordon d’alimentation est endommagé, ni aucun appareil qui serait tombé ou aurait été endommagé ou même partiellement plongé dans l’eau. Appeler le service clientèle de Life Fitness.
- Ne jamais faire fonctionner d’appareil Life Fitness dont les orifices d’aération seraient bloqués. Les garder exempts de peluches, de cheveux ou de toute obstruction.
- Pour débrancher, mettre l’appareil hors tension au niveau de l’interrupteur d’alimentation, puis retirer la fiche de la prise électrique.
- Laisser les consoles ACL se « normaliser » pendant une heure quant à la température avant le branchement et l’utilisation de l’appareil.

CONSERVER CES INSTRUCTIONS POUR TOUT USAGE ULTÉRIEUR.

2 FlexStrider® Overview

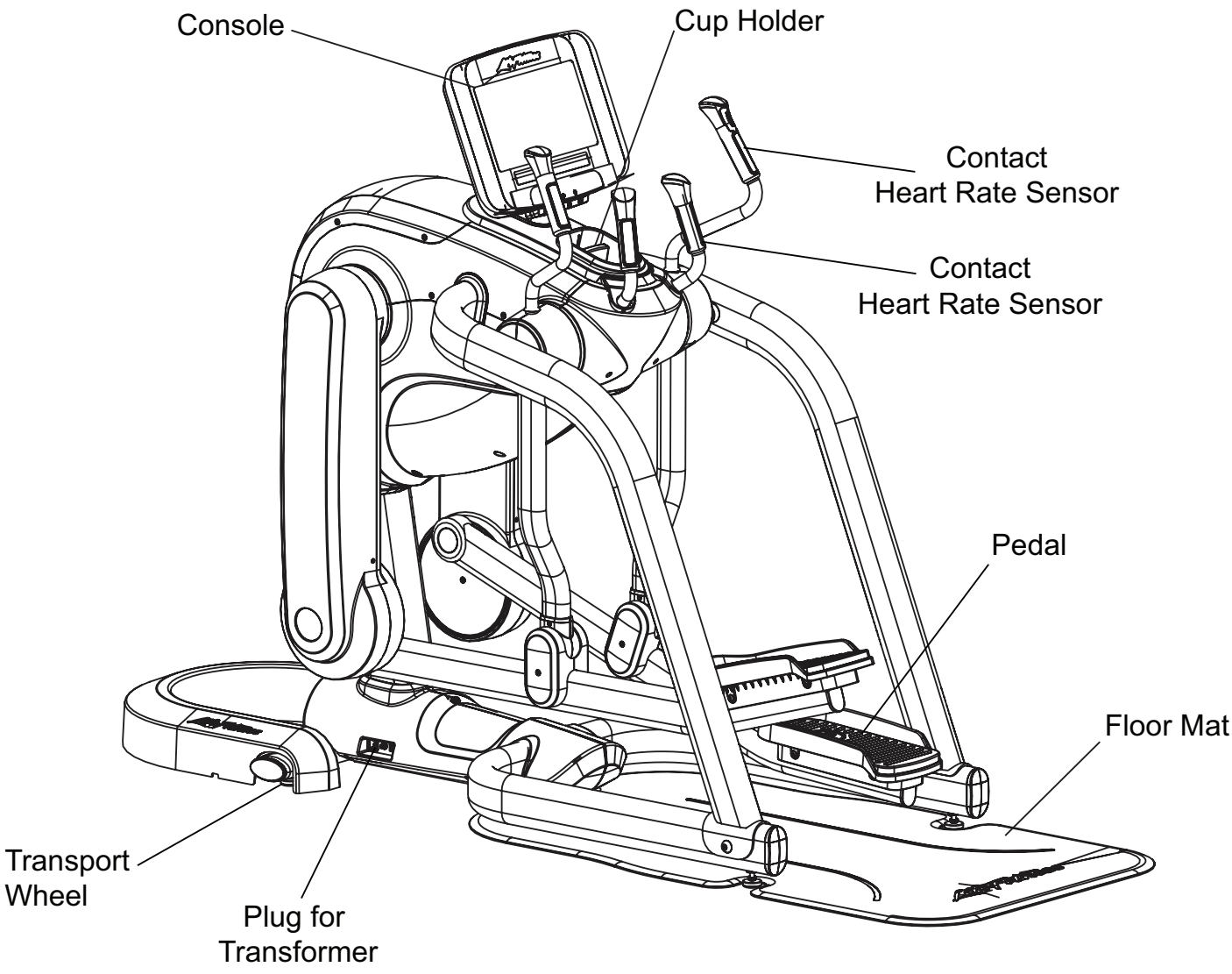

3 Initial Setup

Read the entire User Manual before setting up the FlexStrider Variable-Stride Trainer.

Note: *This FlexStrider Variable-Stride Trainer is speed independent. Resistance can be adjusted by means other than speed. See Specifications.*

Grounding Instructions

This product must be grounded. If it should malfunction or breakdown, grounding provides a path of least resistance for electric current to reduce the risk of electric shock. This product is equipped with a cord having an equipment-grounding conductor and a grounding plug. The plug must be plugged into an appropriate outlet that is properly installed and grounded in accordance with all local codes and ordinances.

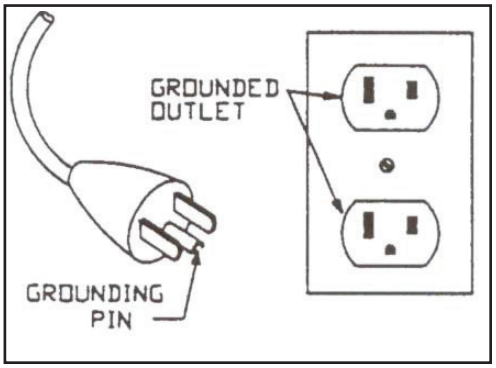

DANGER: Improper connection of the equipment-grounding conductor can result in a risk of electric shock. Check with a qualified electrician or service-man if you are in doubt as to whether the product is properly grounded. Do not modify the plug provided with the product - if it will not fit the outlet, have a proper outlet installed by a qualified electrician.

Supply Voltage (VAC)	Frequency (Hz)	Maximum Current (Amps)
120	50 / 60	2.5
220-240	50 / 60	1.25

Where to Place the FlexStrider Variable-Stride Trainer

After following all safety instructions move the FlexStrider Variable-Stride Trainer to the place where it will be used. Allow a minimum clearance of 24 inches (60cm) around the product. See *Specifications* for full dimensions if needed. The FlexStrider Variable-Stride Trainer is equipped with front wheels. To move the product, lift the rear and either push or pull in order to move the FlexStrider Variable-Stride Trainer to its final destination. To use the wheels make sure that the levelers are twisted up far enough so that all wheels (A) can engage with the floor.

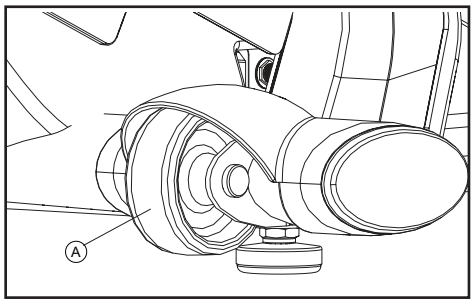

Once the FlexStrider Variable-Stride Trainer is properly positioned, allow enough space in the front of the FlexStrider Variable-Stride Trainer for the movement of the pedal levers.

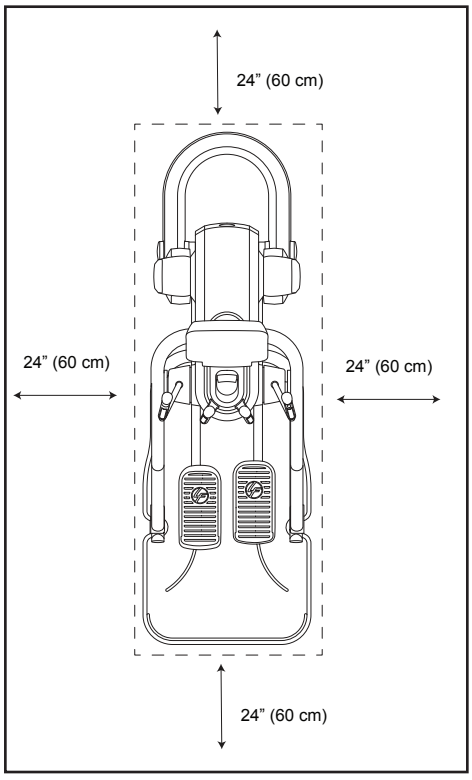

CAUTION: Make certain you have plenty of room for the swing of the moving arms.

CAUTION: Place FlexStrider Variable-Stride Trainer in a dry place. Do not place in highly humid areas, like near swimming pools, as rust and corrosion may occur.

How to Stabilize the FlexStrider Variable-Stride Trainer

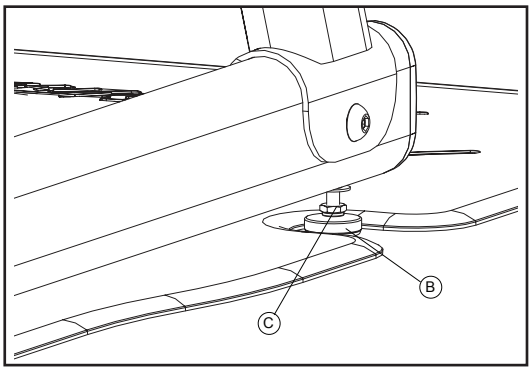

Once the cross-trainer is positioned in the room lower the levelers on the front stabilizer (B) to contact the floor. All four wheels must be completely off the floor. The levelers will keep the cross-trainer fixed to the floor while using it.

CAUTION: Do not use the FlexStrider Variable-Stride Trainer without the levelers touching the floor.

After placing the FlexStrider Variable-Stride Trainer where it will be used, check the stability. If there is even a slight rocking motion, or the unit is not stable the levelers will need to be adjusted. Determine which leveler is not resting firmly on the floor. To adjust the levelers downward twist the rubber portion of the leg counterclockwise. To adjust the levelers upward twist the rubber portion of the leg clockwise. After adjusting the levelers, tighten the jam nuts (C) against the stabilizer to lock the levelers in place.

Note: *After the FlexStrider is level, be sure to tighten the nut on the leveler against the stabilizer tube. If this is not tightened, noise will occur.*

Powering Up the FlexStrider Variable-Stride Trainer

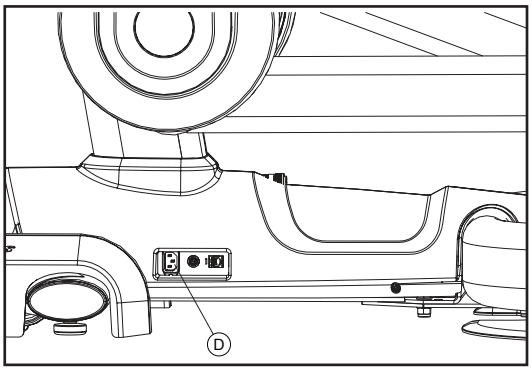

Your Life Fitness FlexStrider Variable-Stride Trainer may come with either a U.S. power supply or one of several international power supplies. Insert the appropriate power adapter jack into the connector (D) on the left side of the FlexStrider Variable-Stride Trainer. Then Insert the plug into the wall outlet. Make sure the cord is placed so it doesn't bind and will not be walked on. Then check that the console lights up. If not, recheck the plug and the wall connections and make sure the wall outlet has power.

4 Service and Technical Data

4.1 Preventive Maintenance Tips

The Life Fitness FlexStrider Variable-Stride Trainer is backed by the engineering excellence and reliability of Life Fitness and is one of the most rugged and trouble-free pieces of exercise equipment on the market today.

Note: *Safety of the equipment can be maintained only if the equipment is examined regularly for damage or wear. Keep the equipment out of use until the defective parts are required or replaced. Pay special attention to parts that are subject to wear, as outlined below.*

The following preventive maintenance tips will keep the Life Fitness FlexStrider Variable-Stride Trainer operating at Peak performance:

Important: Turn the cross-trainer off and unplug prior to performing any maintenance	
Weekly	Inspect the power cord. If the cord is damaged call technical support. Make sure the cord is positioned in a location where it will not be damaged.
Monthly	Clean the top surface of the pedals
	Clean the display console and all exterior surfaces with mild soap, water and a soft cotton cloth or a Life Fitness approved cleaner. **Note:** Do not use paper towels, ammonia or acid based cleaners on the product. At no time should cleaner be applied directly to any part of the equipment; spray the cleaner on a soft cloth and then wipe the unit.
	Inspect the exterior parts for wear and check that user assembly bolts are still tight.

Note: Long fingernails may damage or scratch the surface of the console. Use the pad of the finger to press the keys.

LIFE FITNESS Approved Cleaners *(United States Availability Only)*

Two preferred cleaners have been approved by Life Fitness reliability experts: PureGreen 24 and Gym Wipes. Both cleaners will safely and effectively remove dirt, grime and sweat from equipment. PureGreen 24 and the Antibacterial Force formula of Gym Wipes are both disinfectants that are effective against MRSA and H1N1.

PureGreen 24 is available in a convenient spray. Apply the spray to a microfiber cloth and wipe down the equipment. Use PureGreen 24 on the equipment for at least 2 minutes for general disinfection purposes and at least 10 minutes for fungus and viral control.

Gym Wipes are large, durable pre-moistened wipes to use on the equipment before and after workouts. Use Gym Wipes on the equipment for at least 2 minutes for general disinfection purposes.

Contact Life Fitness Customer Support Services to order these cleaners.
Call 1-800-351-3737 or email: customersupport@lifefitness.com.

LIFE FITNESS Compatible Cleaners

Mild soap and water or a mild non-abrasive household cleaner can also be used to clean the display and all exterior surfaces. Use a soft microfiber cloth only. Apply the cleaner to the microfiber cloth before cleaning. DO NOT use ammonia or acid based cleaners. DO NOT use abrasive cleaners. DO NOT use paper towels. DO NOT apply cleaners directly to the equipment surfaces.

4.2 Preventive Maintenance Schedule

Item	Weekly	Monthly	Bi-Annually
Console Overlay	Clean		Inspect
Bottle Holders	Clean	Inspect	
Console Mounting Bolts			Inspect
Frame	Clean		Inspect
Plastic Covers	Clean	Inspect	
Lifepulse Sensors	Clean / Inspect		
Pedals and Straps	Clean	Inspect	

4.3 How to Obtain Product Service

1. Please contact your dealer or Life Fitness Customer Service at 1-800-351-3737.
2. Verify the symptom and review the operating instructions and troubleshooting matrix.
3. Locate and document the serial number of the unit. The serial number plate is located on the rear stabilizer. Please also have proof of purchase information available.

5 Assembly

5.1 Component List & Hardware

Identify the following components after unpacking your FlexStrider. The tools needed for assembling the product are included.

Item	Description	Qty
1	M4.2 X 0.7 6G6G X 19 DIN PHL PAN AB ST ZB	12
2	M8 X 1.25 6G6G X 70 DIN UNS HEX CS ST ZN	3
3	M5 X .8 X 14 PHL PAN MS ST BZ	4
4	SCR: M4.2 X 0.7 6G6G X 25 DIN PHL PAN AB ST ZS	4
5	M8 X 1.25 6G6H X 16 UNS HXW CS ST ZB	11
6	FLOOR MAT	1
7	COVER: REAR	1
8	COVER: DEADSHAFT; A	2
9	COVER: DEADHSAFT; B	2
10	GASKET: TOP CUP HOLDER	1
11	COVER: BASE; LEFT	1
12	COVER: BASE; RIGHT	1
13	CUPHOLDER	1
14	SHROUD: CONSOLE BACK: FLEXSTRIDER	1
15	COVER: FRONT; TIC TOC ZONE	1
16	BRACKET: DEADSHAFT COVER CLIP	2
17	ASSY: HANDLEBAR; LH	1
18	ASSY: HANDLEBAR; RH	1
19	ASSY: BULLHORNS	1
20	WELDMENT: CONSOLE MNT; PAINTED	1
Console Cables		
21	CABLE ASSEMBLY: CAT-5E	1
22	COAX ASSEMBLY: RG6; BASE	1
23	GROUND CABLE	1
24	PCB TO CONSOLE CABLE	1
25	EXTERNAL POWER CABLE	1
26	CABLE ASSEMBLY : LIFEPULSE; FLEX	1
27	CABLE ASSEMBLY : LIFEPULSE Y	1

Tools Needed for Assembly:

- Metric Wrench Set
- Phillips Screwdriver

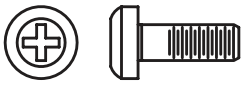

M4.2 X 19MM
Phillips Pan HeadScrew (#1)

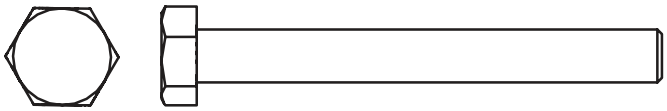

M8 X 70MM Hex Screw (#2)

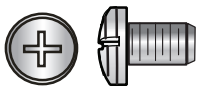

M5 X 8MM
Phillips Pan Head Screw (#3)

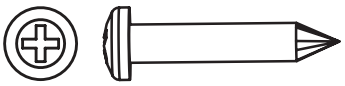

M4.2 X 25MM
Phillips Pan Head Screw (#4)

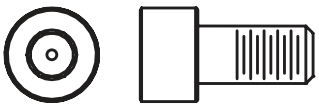

M8 X 16MM Screw (#5)

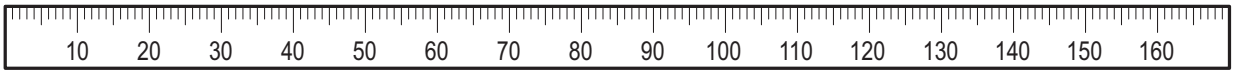

1

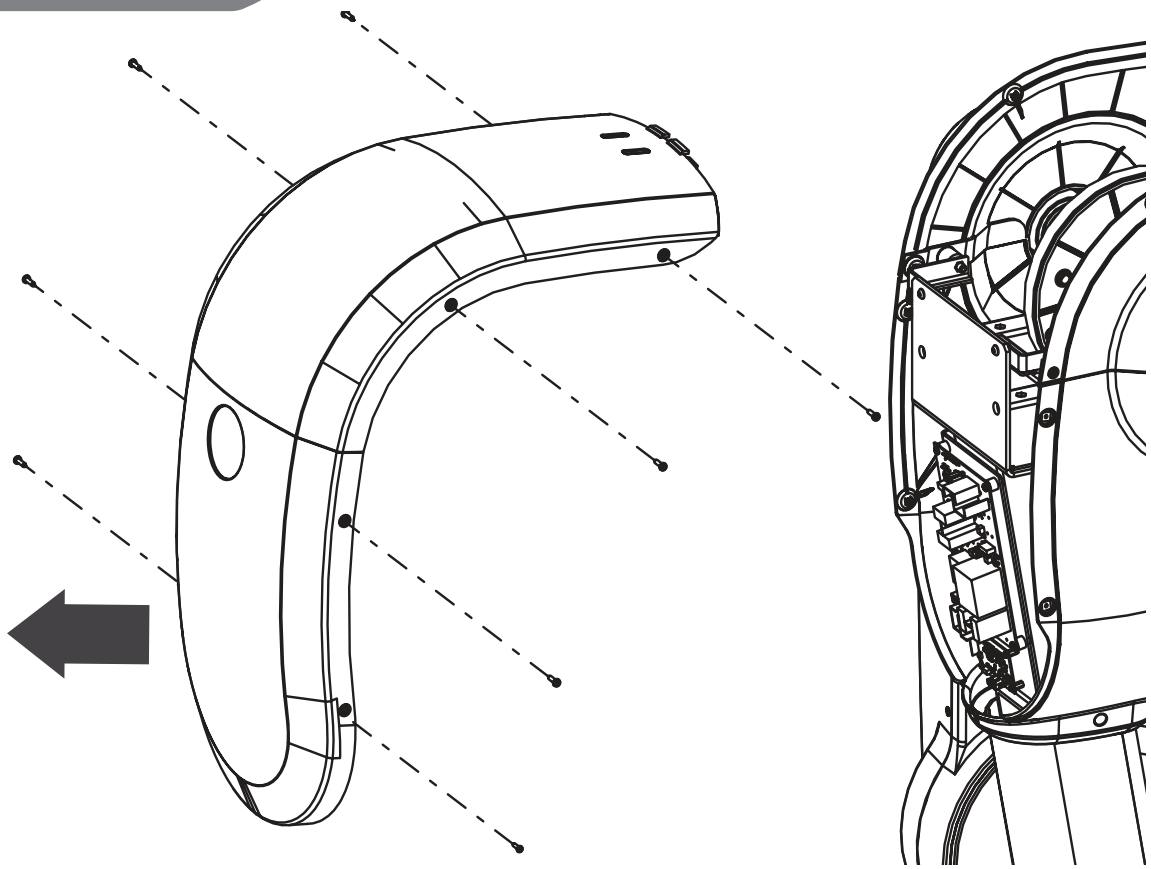

2

24.5-31.5 ft. lbs.
(33.2-42.7 Nm)

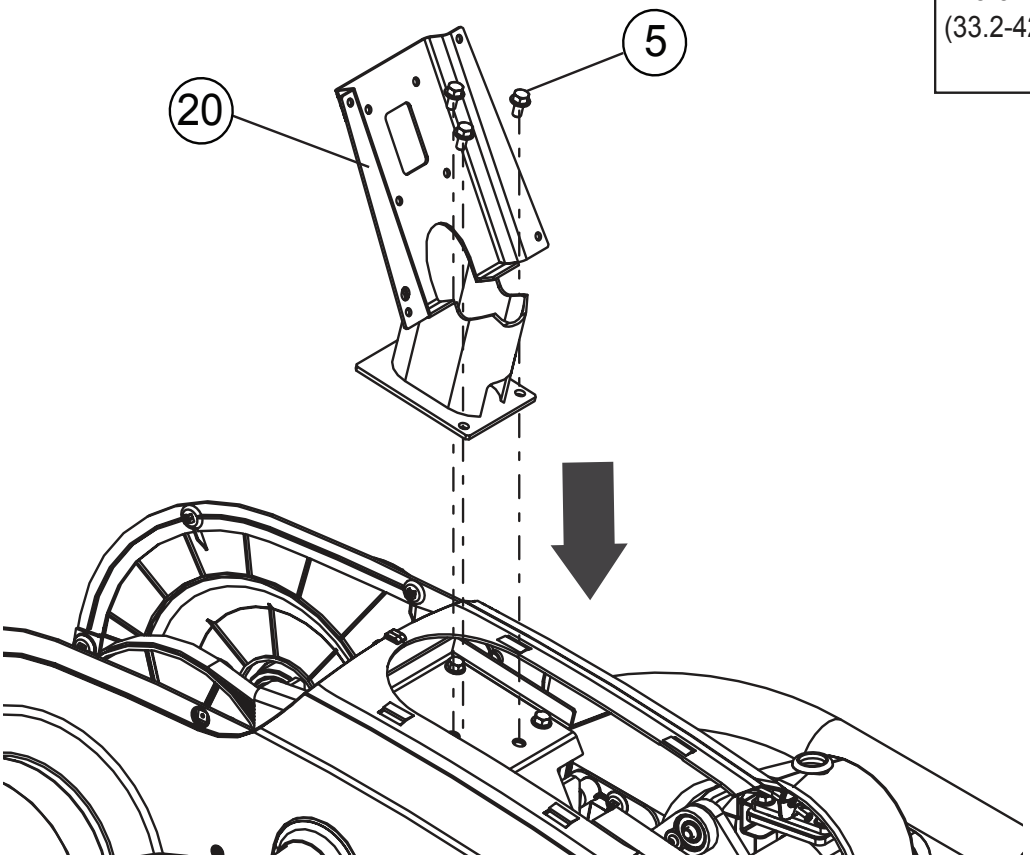

3

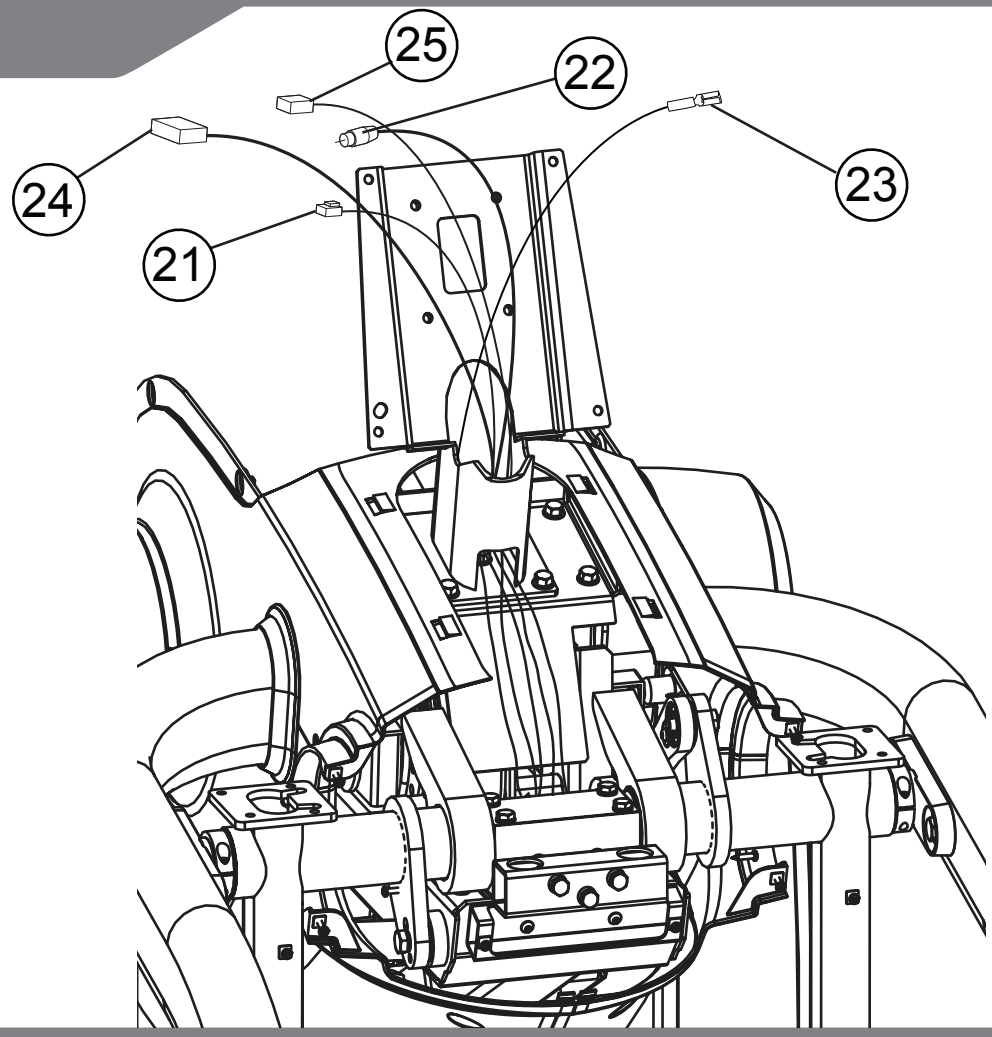

4

17.4-21.7 in. lbs.
(2.0-2.5 Nm)

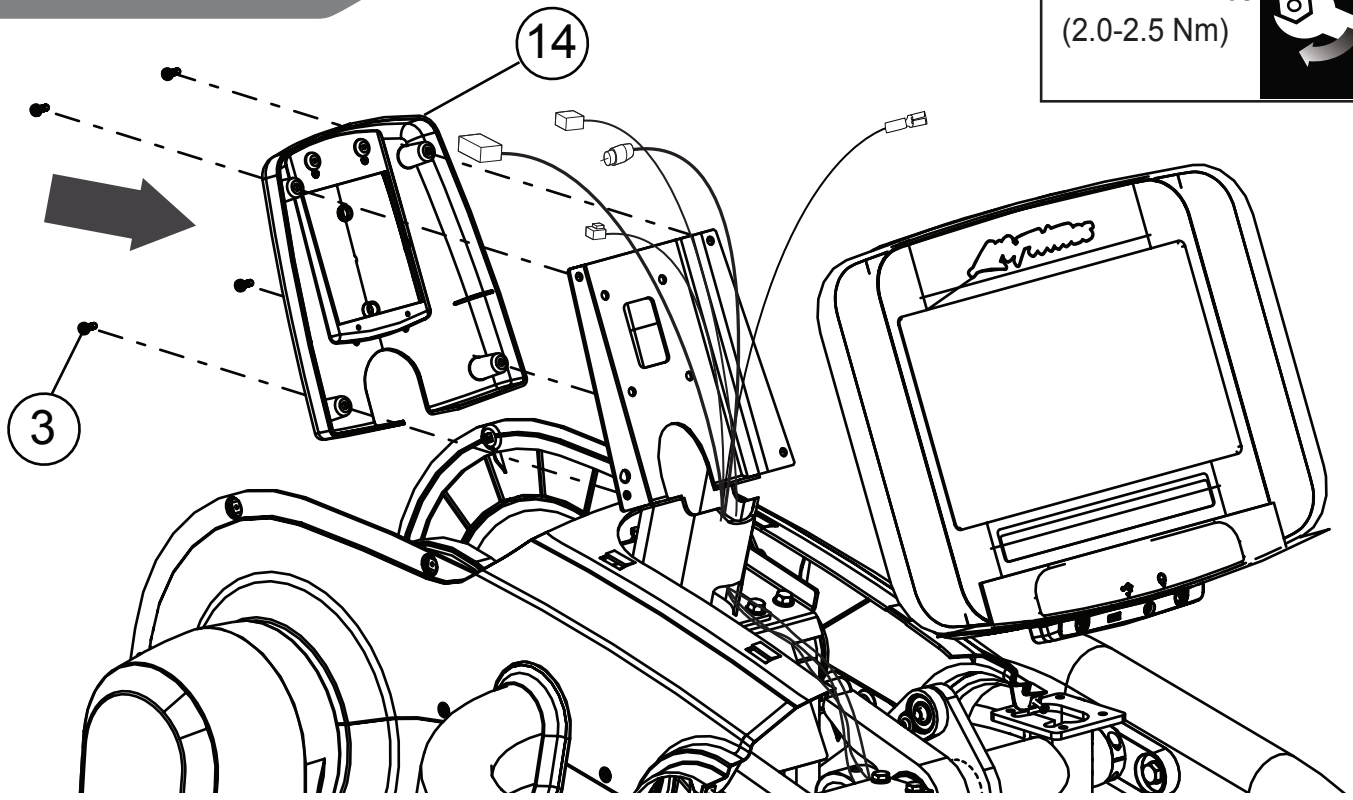

5

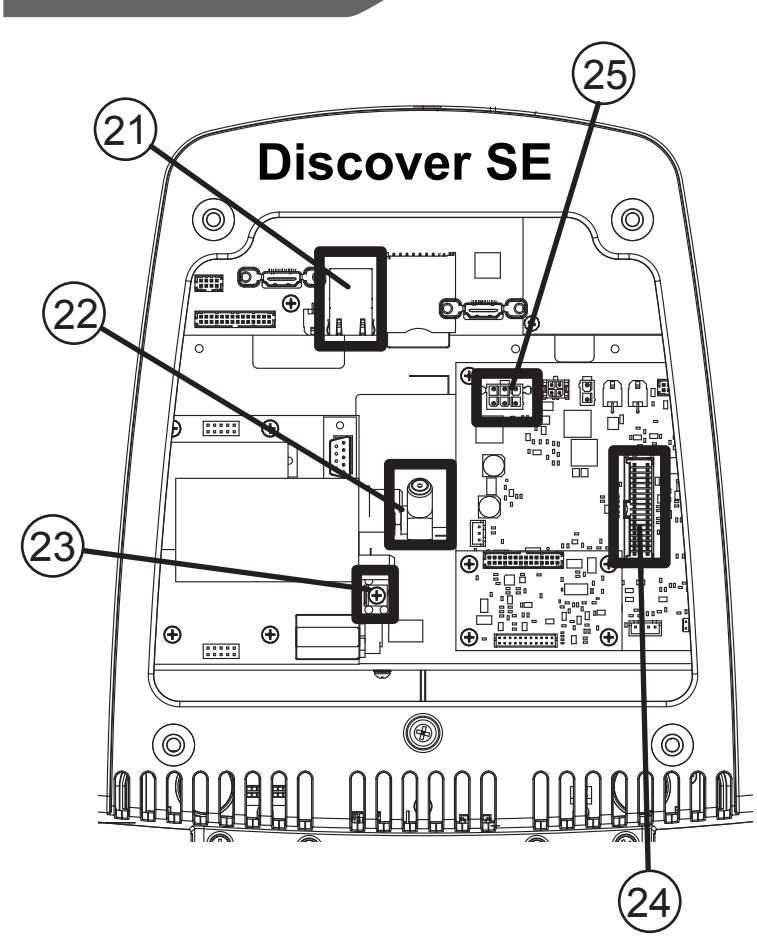
Discover SE
21
25
22
23
24

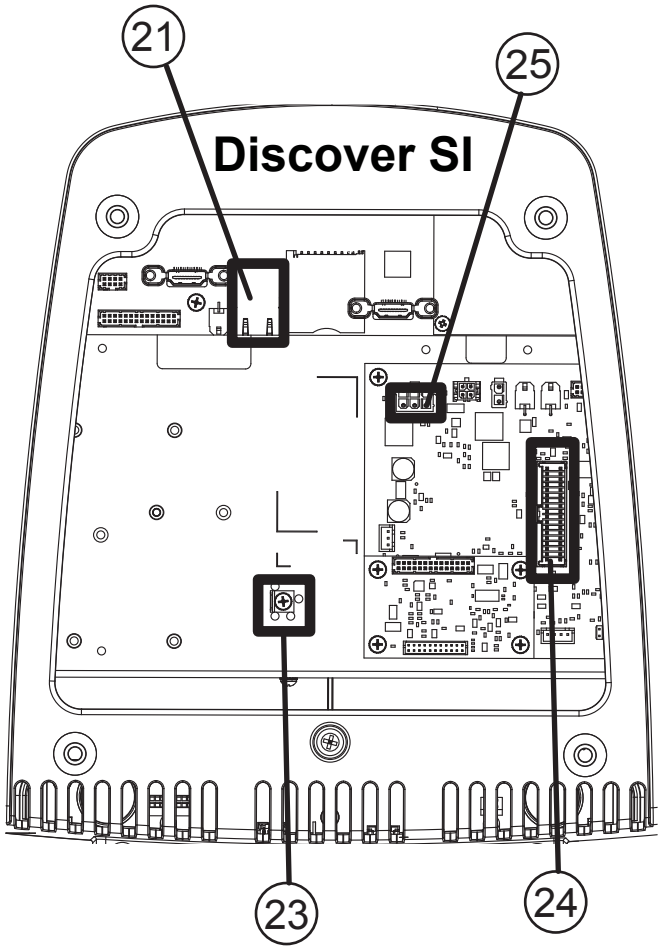
Discover SI
21
25
23
24

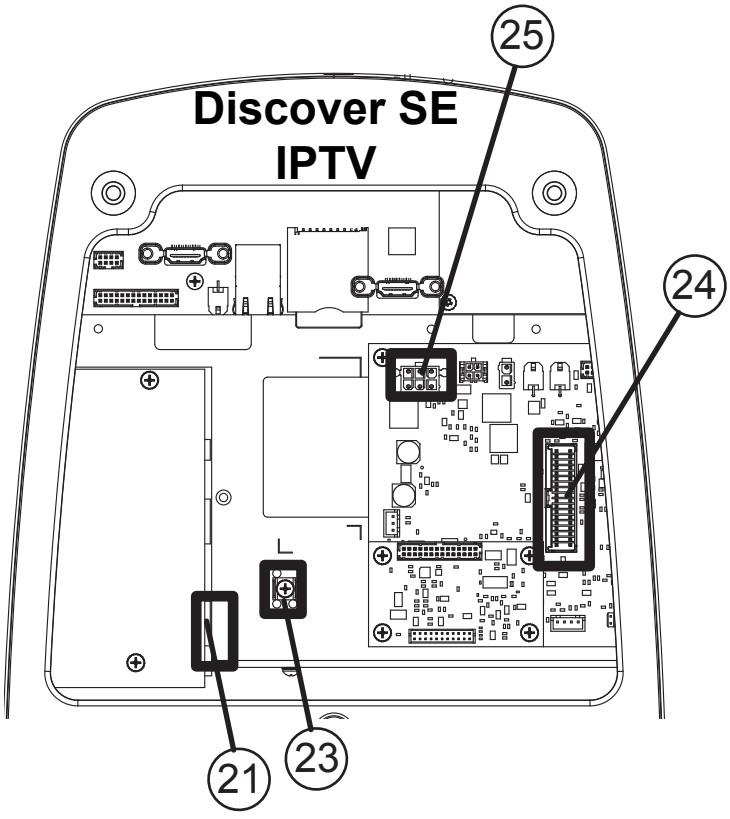
Discover SE
IPTV
25
24
21
23

6

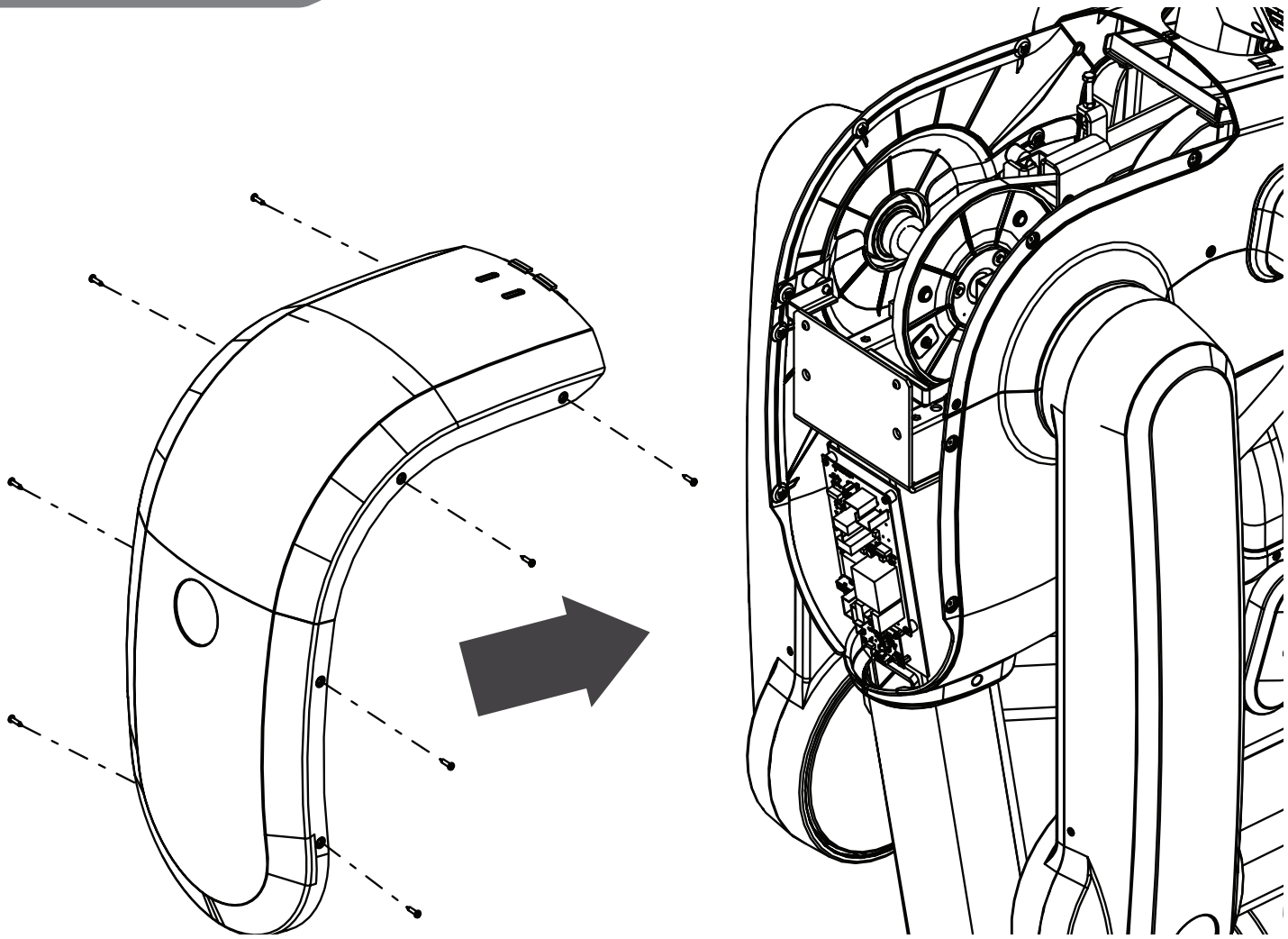

7

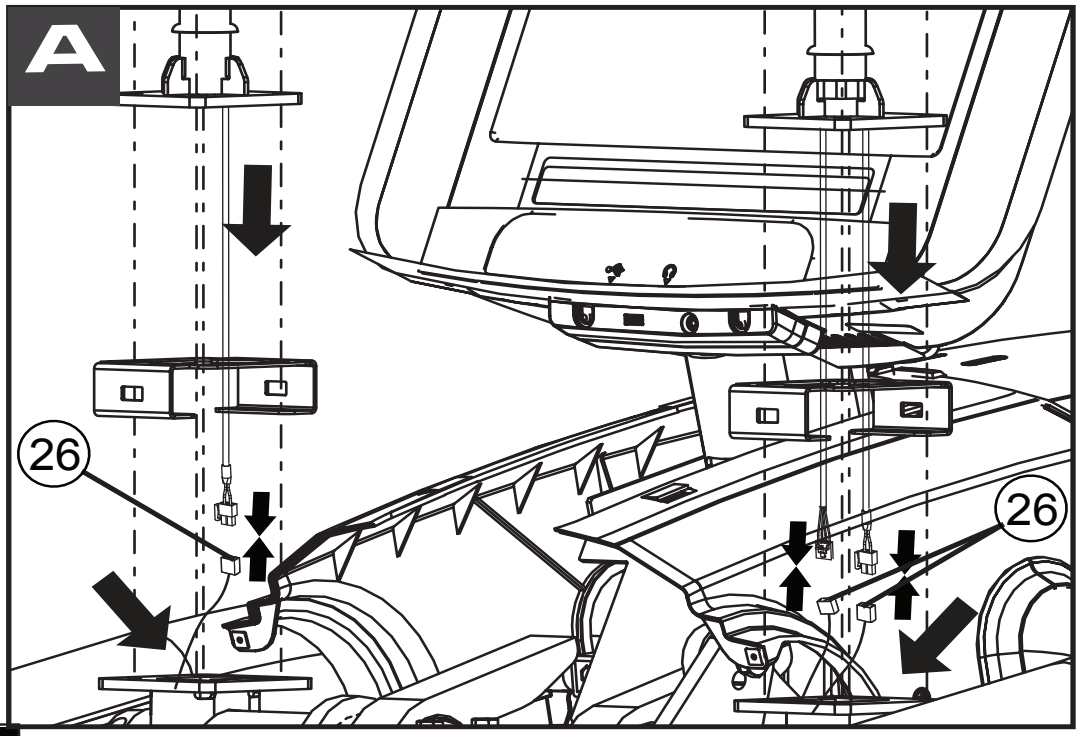

24.5-31.5 ft. lbs.
(33.2-42.7 Nm)

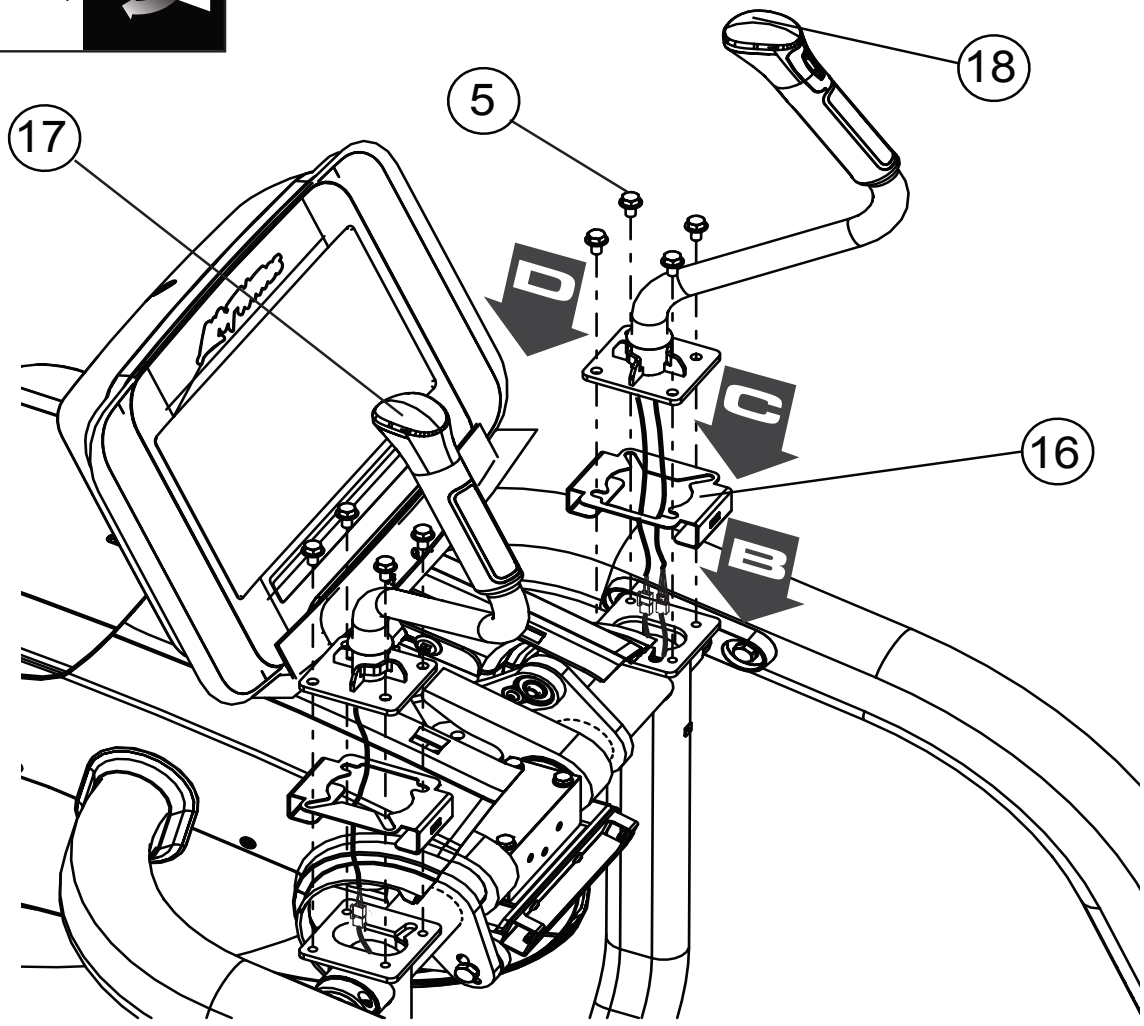

8

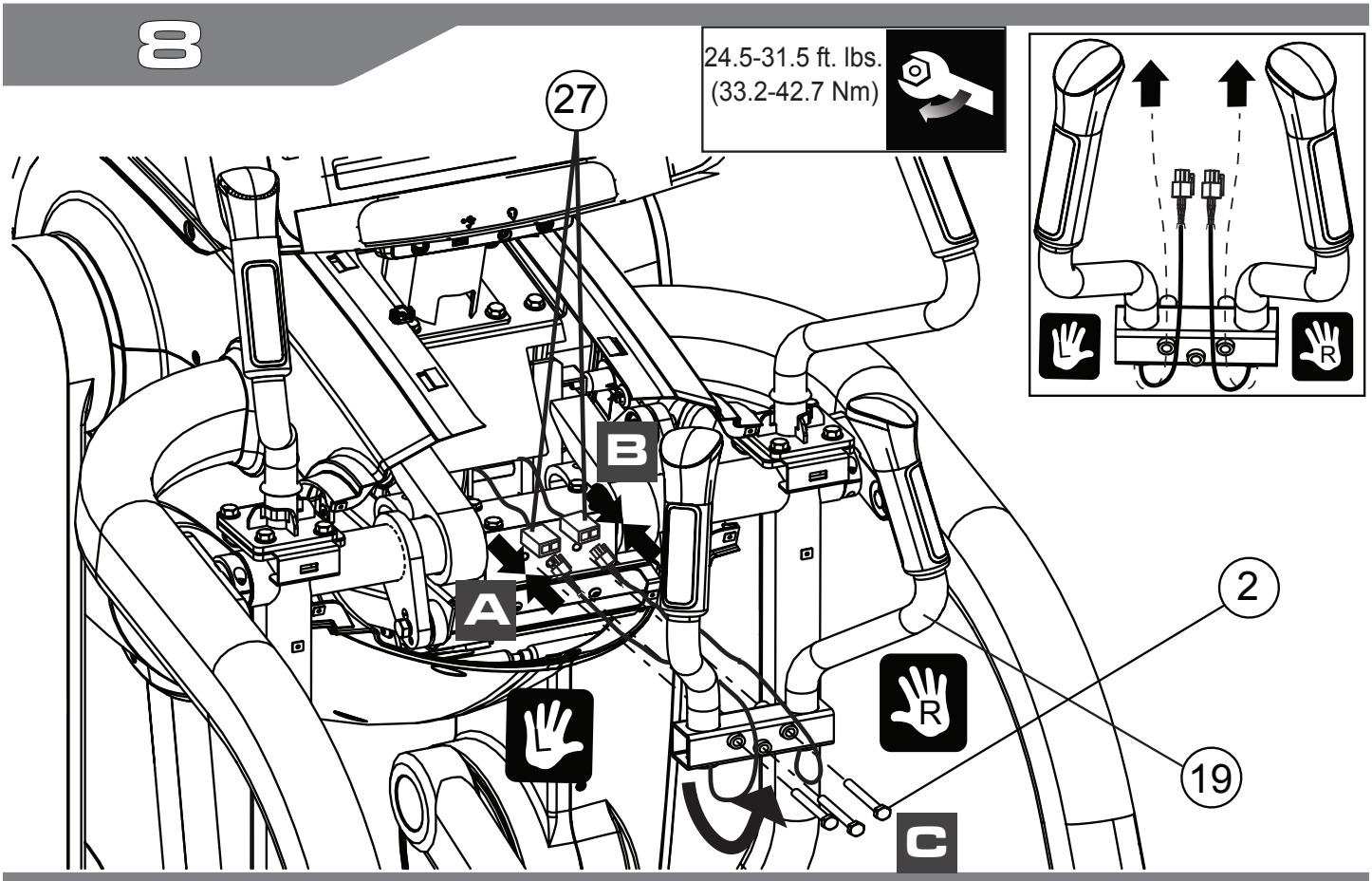

9

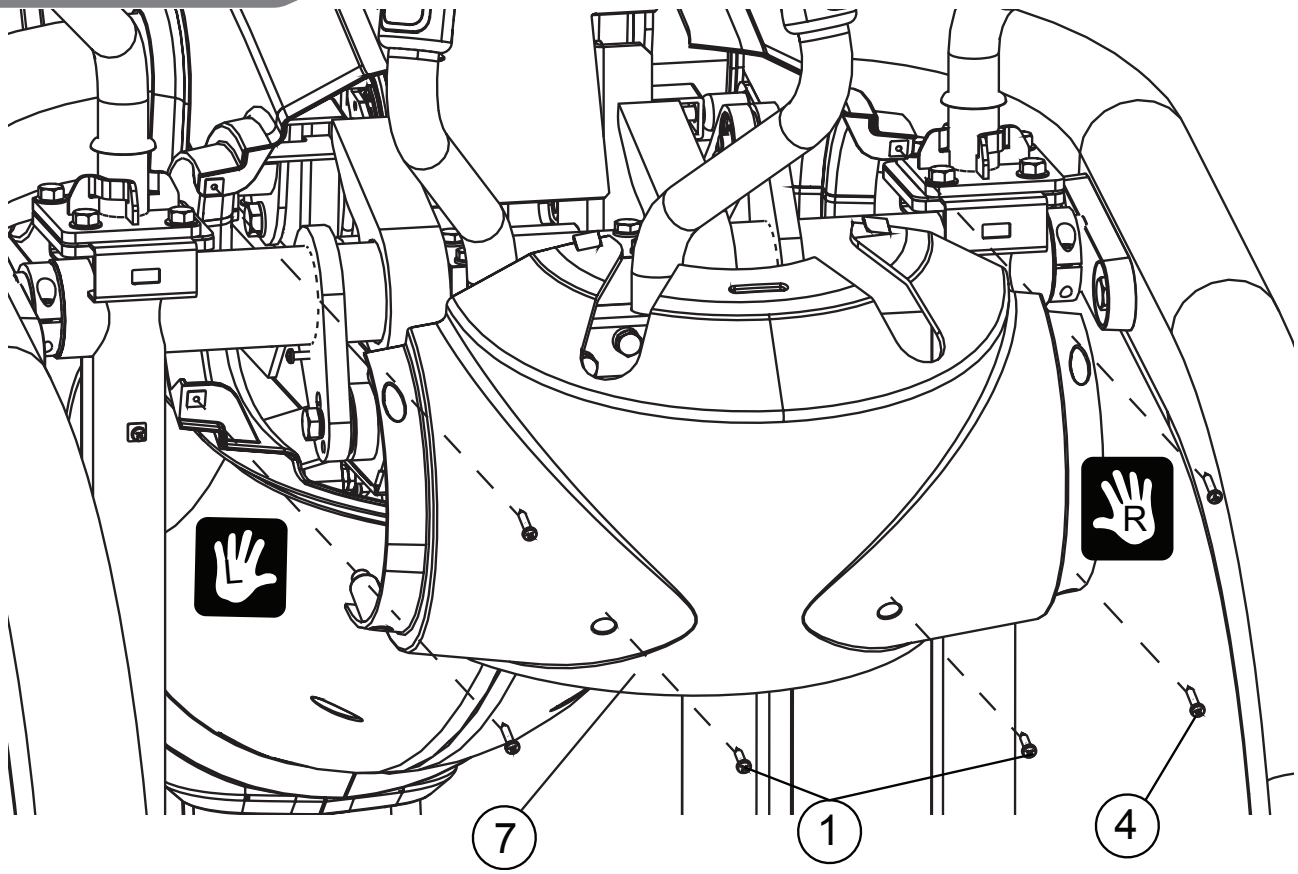

10

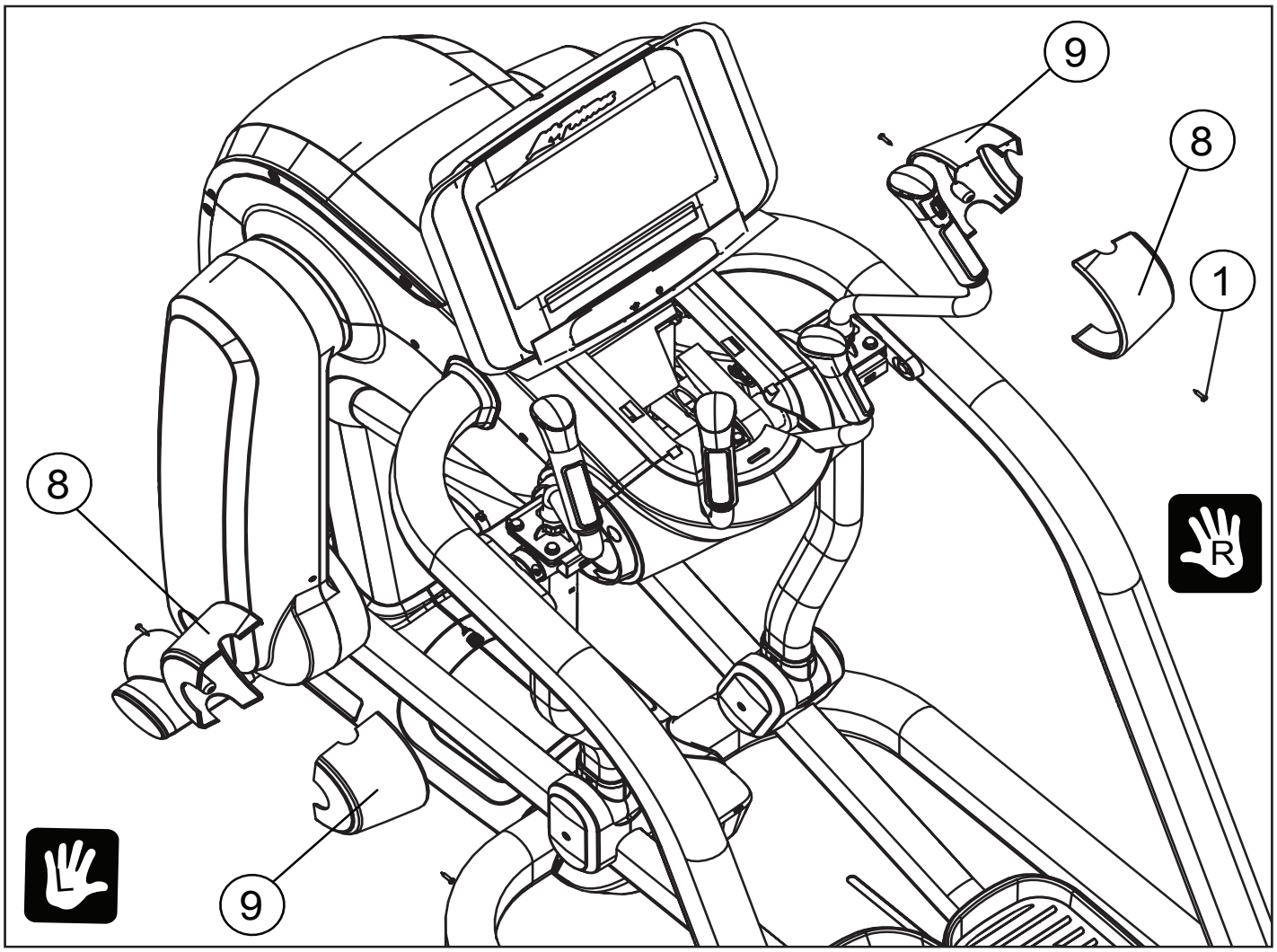

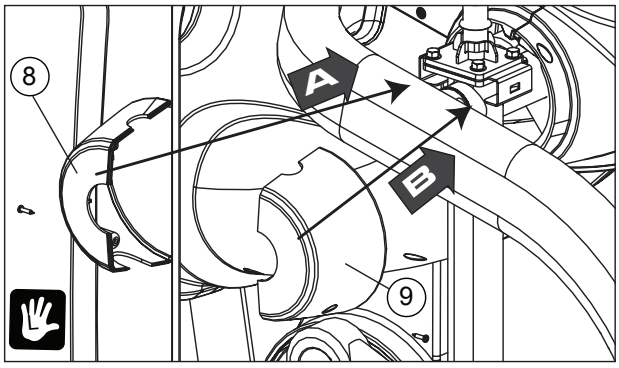

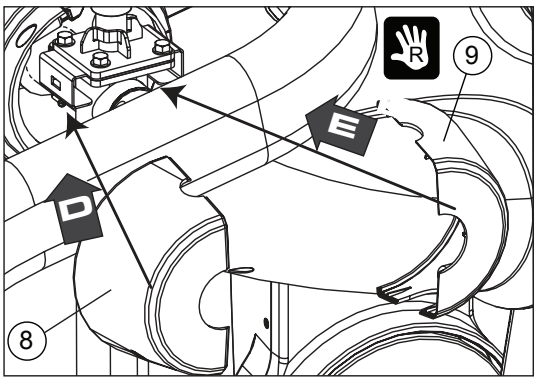

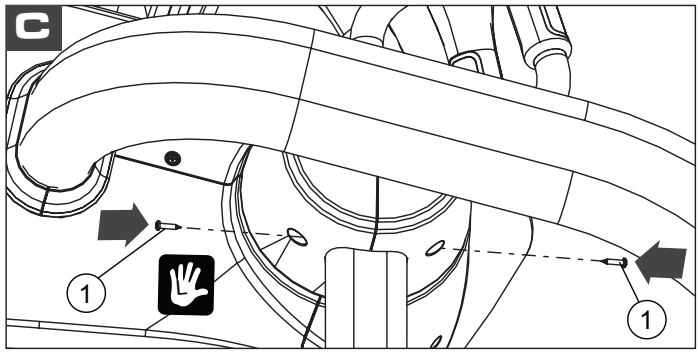

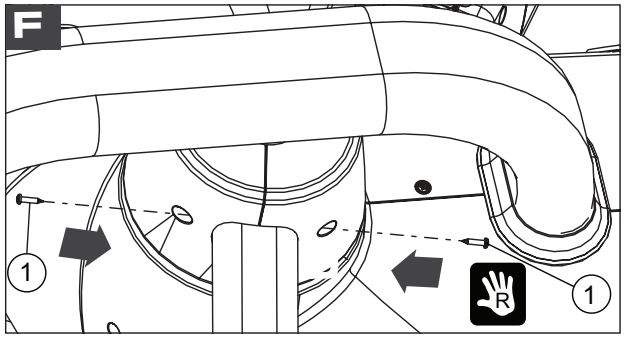

11

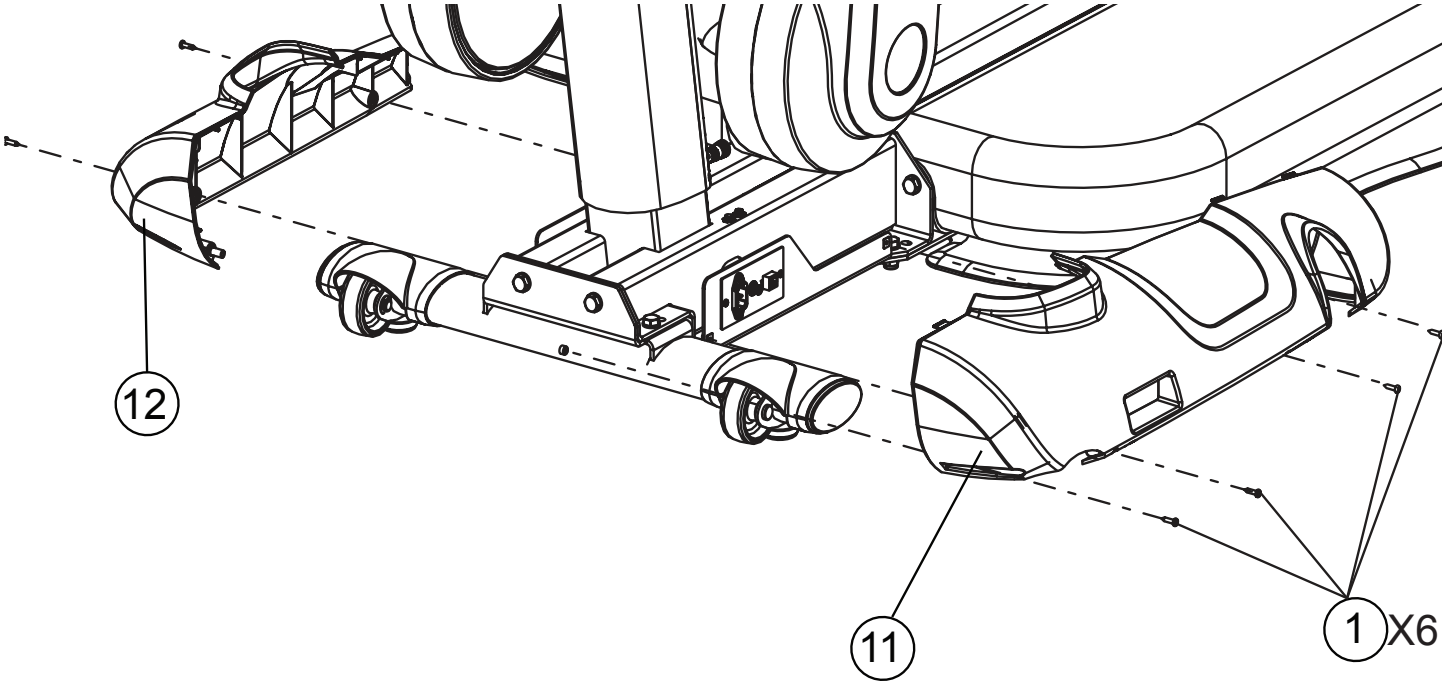

12

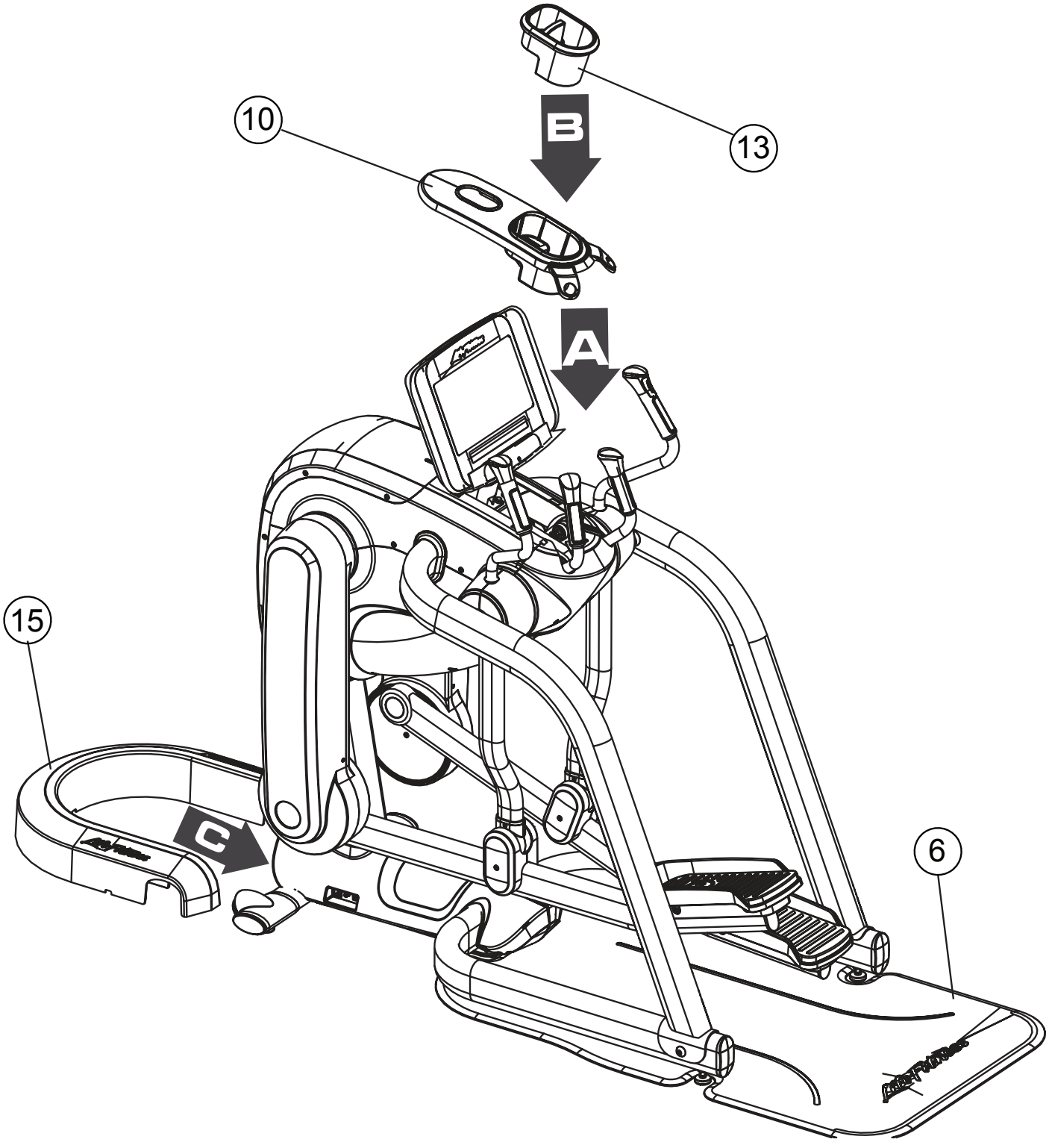

13

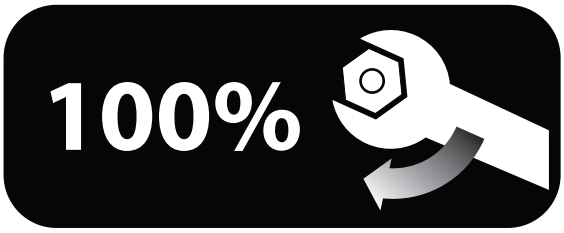

MAKE SURE ALL HARDWARE IS TIGHT

Controleer of alle bevestigingen goed vast zitten

Vérifier que toute la visserie est serrée

Sicherstellen, dass alle Befestigungsteile festgezogen sind

Assicurarsi che tutta la bulloneria sia ben stretta

すべての金具がしっかり固定されていることを確認してください

Certifique-se de que todas as peças estejam bem apertadas

Asegúrese de que todas las piezas estén firmes

6 Specifications

6.1 Elevation Series FlexStrider Variable-Stride Trainer

Designed Use:	Heavy/Commercial
Max User Weight:	400 pounds / 181 kilograms
Pedal Size:	15.87 in / 40.3 cm
Drive Type:	Poly -V belt-drive
Power Requirements:	120 Volt (U.S.), 220-240 Volt (International High Voltage) Accessories:
Resistance System:	Belt/Generator/Brake

Note: *Both resistance systems are adjustable by means other than pedaling speed.*

Assembled Dimensions	
Length	104 in / 264 cm
Width	34 in / 86 cm
Height	68 in / 173 cm
Weight	589 pounds / 267 kilograms
Shipped Dimensions	
Length	72 in / 183 cm
Width	34 in / 86 cm
Height	61 in / 155 cm
Weight	670 pounds / 304 kilograms

7 Warranty Information

Model	2 Years	1 Year
FlexStrider Variable-Stride Trainer	Electrical Parts & Mechanical Parts	Labor

What Is Covered.
This LIFE FITNESS consumer product ("Product") is warranted to be free of all defects in material and workmanship.

Who Is Covered.
The original purchaser or any person receiving a newly purchased Product as a gift from the original purchaser. Warranty will be voided on subsequent transfers.

How Long Is It Covered.
Residential: All electrical and mechanical components and labor are covered, after the date of purchase, as listed on the chart above.

Non-Residential: Warranty void *(this Product is intended for residential use only)*.

Who Pays Transportation & Insurance For Service.
If the Product or any covered part must be returned to a service facility for repairs, We, LIFE FITNESS, will pay all shipping and insurance charges during the warranty period *(within the United States only)*. The purchaser is responsible for shipping and insurance charges after the warranty has expired.

What We Will Do To Correct Covered Defects.
We will ship to you any new or rebuilt replacement part or component, or, at our option, replace the Product. Such replacement parts are warranted for the remaining portion of the original warranty period.

What Is Not Covered.
Any failures or damage caused by unauthorized service, misuse, accident, negligence, improper assembly or installation, debris resulting from any construction activities in the Product's environment, rust or corrosion as a result of the Product's location, alterations or modifications without our written authorization or by failure on your part to use, operate and maintain the Product as set out in your User Manual ("Manual"). All terms of this warranty are void if this Product is moved beyond the continental borders of the United States of America *(excluding Alaska, Hawaii and Canada)* and are then subject to the terms provided by that country's local authorized LIFE FITNESS representative.

What You Must Do.
Retain proof of purchase (our receipt of the attached registration card assures registration of purchase information but is not required); use, operate and maintain the Product as specified in the Manual; notify the place of purchase of any defect within 10 days after discovery of the defect; if instructed, return any defective part for replacement or, if necessary, the entire Product for repair. LIFE FITNESS reserves the right to decide whether or not a product is to be returned for repair.

Product Registration.
Register at ***www.lifefitness.com/home/product-registration.html.*** Our receipt assures that your name, address, and date of purchase are on file as a registered owner of the Product. Being a registered owner assures coverage in the event you lose your proof of purchase. Please retain your proof of purchase, such as your bill of sale or receipt.

User Manual.
It is VERY IMPORTANT THAT YOU READ THE MANUAL before operating the Product. Remember to perform the periodic maintenance requirements specified in the Manual to assure proper operation and your continued satisfaction.

How To Get Replacement Parts & Service.
Refer to page one of this manual for your local service contact information. Reference your name, address and the serial number of your Product *(consoles and frames may have separate serial numbers)*. They will tell you how to get a replacement part, or, if necessary, arrange for service where your Product is located.

Exclusive Warranty.
THIS LIMITED WARRANTY IS IN LIEU OF ALL OTHER WARRANTIES OF ANY KIND EITHER EXPRESSED OR IMPLIED, INCLUDING BUT NOT LIMITED TO THE IMPLIED WARRANTIES OF MERCHANTABILITY AND FITNESS FOR A PARTICULAR PURPOSE, AND ALL OTHER OBLIGATIONS OR LIABILITIES ON OUR PART. We neither assume nor authorize any person to assure for us any other obligation or liability concerning the sale of this Product. Under no circumstances shall we be liable under this warranty, or otherwise, of any damage to any person or property, including any lost profits or lost savings, for any special, indirect, secondary, incidental or consequential damages of any nature arising out of the use of or inability to use this Product. Some states do not allow the exclusion or limitation of implied warranties or of liability for incidental or consequential damages, so the above limitations or exclusions may not apply to you. Warranties may vary outside the U.S. Contact Life Fitness for details.

Changes In Warranty Not Authorized.
No one is authorized to change, modify or extend the terms of this limited warranty.

Effect Of State Laws.
This warranty gives you specific legal rights and you may have other rights which vary from state to state.