cardiostrong®

Assembly and operating instructions

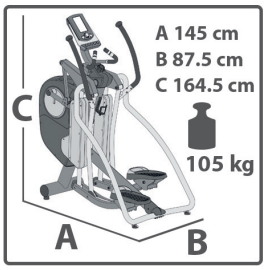

CSTEX90PLUST.01.01

Art. No. CST-EX90-PLUS-T

Elliptical cross trainer EX90 Plus Touch

Dear Customer,

Thank you for deciding for a high-quality training equipment of the brand cardiostrong®, the brand that makes athlete's hearts beat faster. cardiostrong® offers a wide range of home fitness equipment like elliptical cross trainers, ergometers, treadmills and rowing machines. cardiostrong® equipment is the optimal equipment for all those who want to train at home independent of goals and fitness level. For further information please visit www.sport-tiedje.com or www.cardiostrong.de.

SAFETY INSTRUCTIONS

Please read all of the instructions carefully before assembly and first use. These instructions are intended to ensure speedy assembly and explain safe usage. Make sure that all people exercising with the equipment (in particular children and persons with limited physical, sensory, mental or motor capabilities) are informed about these instructions and its content in advance. In case of doubt, a responsible person must supervise the use of the equipment.

This equipment has been manufactured according to the latest safety knowledge. As far as possible, potential safety hazards which could cause injury have been eliminated. Make sure to follow the instructions carefully and that all parts are securely in place. If required, read through the instructions again to correct any mistakes.

Please pay close attention to the safety and maintenance instructions given here. The contract partner cannot be held liable for damage to health, accidents or damage to the equipment when it is not used in accordance with these instructions.

The equipment is suitable for home use as well as semi-professional use (e. g., hospitals, clubs, hotels, schools, etc.). It is not suitable for commercial or professional use (e. g., commercial gyms).

Retain these instructions in a safe place for future reference, maintenance or when ordering replacement parts.

CONTENTS

1.1 Technical data

TFT display of

+ speed in km/h
+ training time in min
+ training distance in km
+ cadence (rotations per minute)
+ calories burnt in kcal
+ heart rate (when using the hand sensors or a chest strap)
+ Watt
+ resistance level

Resistance system:	electronic magnetic brake system
Resistance level:	16
Watt:	10 - 350 Watt (adjustable in 5-Watt increments)

User memory:	4
Total number of training programs:	19
Manual programs:	1
Pre-set programs:	12
Watt-controlled programs:	1
Heart rate controlled programs:	4
User defined programs:	1

Balance mass:	12 kg
Stride length:	45 - 65 cm
Step width:	11 cm

Electronic step length adjustment:
45 cm (18“), 50 cm (20“), 55 cm (22“), 60 cm (24“), 65 cm (26“)

Weight and dimensions:
Article weight (gross, including packaging): 135.70 kg
Article weight (net, without packaging): 104.7 kg
Packaging dimensions (L x W x H): approximately 1410 mm x 1150 mm x 500 mm
Set-up dimensions (L x W x H): approximately 1450 mm x 875 mm x 1645 mm
Maximum user weight: 150 kg/330 lbs

1.2 Personal safety

+ Before you start using the equipment, you should consult your physician that this type of exercise is suitable for you from a health perspective. Particularly affected are persons who: have a hereditary disposition to high blood pressure or heart disease, are over the age of 45, smoke, have high cholesterol values, are overweight and/or have not exercised regularly in the past year.
+ Please note that working out excessively can seriously damage your health. Please also be aware that heart rate monitoring systems might be imprecise.
+ The equipment may only be used for its intended purpose; that means for whole body workouts for adults.
+ Any other usage is prohibited and potentially dangerous. The contract partner cannot be held liable for damage resulting from improper use.
+ The equipment is strictly for use by one person at a time.
+ Children should not be allowed unsupervised access to the equipment.
+ Before starting your training, make yourself familiar with all of the equipment's functions and setting options. Have an expert explain the correct usage of the product to you.
+ Make sure that nobody is in the range of motion of the equipment while exercising.
+ Keep your hands, feet and other body parts, hair, clothing, jewelry and other objects well clear of moving parts.
+ During use, wear suitable sports clothing rather than loose or baggy clothing. When selecting sports shoes, think about the suitability of the sole – preferably this should be made of rubber or other non-slip materials. Shoes with heels, leather soles, studs or spikes are not suitable. Never work out in bare feet.
+ It is also important to take note of the information given in the workout instructions for creating a workout plan.
+ At the first signs of weakness, nausea, dizziness, pain, difficulty in breathing or other abnormal symptoms, stop your workout immediately and, if necessary, consult your physician.
+ Without prior agreement from your authorized contract partner, opening the equipment is prohibited.

1.3 Electrical safety

+ The equipment requires a 220 - 230V / 50 Hertz mains power supply.
+ The equipment should be connected directly to a grounded plug socket only by means of the power cable supplied. The use of multi-socket adapters or similar is not recommended. Extension leads must comply with local electrical safety guidelines. Always fully unwind the power cable.
+ The outlet should be secured with a fuse with a minimum value of „16 amperes, slow".
+ In order to reduce the risk of an electric shock, always unplug the equipment from the mains socket immediately after your workout, before assembly or dismantling, and before maintenance or cleaning. Do not pull on the cable.
+ When plugged in, do not leave the equipment unattended at any time. To avoid use by anyone unfamiliar with the operating instructions, the power cable should be removed when the equipment is not in use.
+ Keep the power cable away from heat, oil and sharp edges. Do not route the power cable underneath the equipment or under a carpet or rug, and do not place any objects on top of it.
+ Make no modifications to either the power cable or the mains plug.
+ If the power cable or the plug are damaged or defective, contact your authorized contract partner. Do not use the equipment in the meantime.
+ Do not keep electrical devices (e. g., mobile phones) in close proximity to the console or the control electronics, otherwise display values (e. g., pulse measuring) could be inaccurate.

1.4 Set-up place

+ The equipment should only be used indoors, in a sufficiently heated and dry area (ambient temperature between 10°C and 35°C). The equipment should not be used outdoors or in rooms with high humidity (over 70%) like swimming pools. The equipment should only be stored in surroundings with an ambient temperature between 5°C and 45°C.
+ The training room should be well ventilated during training and not be exposed to any draughts.
+ Choose a location in which to place the equipment such that there is enough free space/ clearance to the front, the rear and to the sides of the equipment (at least 1.50 m). Furthermore, the equipment should not be set up in main entrances or on escape routes.
+ Always keep the power cable away from hot surfaces and grounds and make sure that the cable is not stuck somewhere or becomes a „trip hazard".
+ No objects of any type should be inserted into the openings of the equipment.
+ The equipment should be placed on a level and solid surface, any unevenness in the floor should be leveled out.
+ A floor protective mat / equipment underlay can help to protect high-quality floor coverings (parquet, laminate, cork, carpets) from dents and sweat and can help to level out slight unevenness.

2.1 General instructions

+ Please check if all parts and tools belonging to the equipment are included in the delivery and if there is any transport damage. If there are any complaints, please contact your contract partner directly.
+ Some of the nuts and bolts to be used in assembly are already pre-mounted in order to make set-up as easy as possible.
+ The equipment must be assembled by adults. In case of doubt, ask for assistance from another person with technical skills.
+ Keep children away from the equipment during assembly, because small parts are included in the delivery and may be swallowed.
+ Make sure that you have enough space (at least 1.50 m) in every direction during assembly.
+ Do not leave any tools and packaging materials like plastic sheeting laying around to avoid danger of suffocation for children.
+ Assemble the equipment on an underlay mat or on the cardboard packaging in order to avoid damage to the equipment and to the floor (scratches).
+ Before starting assembly, all individual parts should be placed on the floor next to each other.
+ Read the assembly instructions carefully and assemble the equipment according to the illustrations. Proceed carefully and cautiously.
+ First loosen all parts and check for their correct fitting. Then tighten the screws using a tool.
+ Modifications to the design or improper repairs may pose a hazard to the user and should not be carried out. The product warranty may be void as a result.
+ Only authorized service technicians are permitted to carry out all servicing and/or repairs – it excludes maintenance and care.
+ Damaged or worn components may impair your safety and the lifespan of the equipment. You should therefore immediately replace damaged or worn components. Please contact your contract partner in such a case. The equipment should no longer be used until it has been repaired. When needed, only use original cardiostrong® spare parts.

2.2 Faults and Troubleshooting

The equipment runs through regular quality controls during production. Nevertheless, errors or malfunctions on the equipment may occur. Individual parts are often the cause of faults and replacement is usually sufficient. Please use the following overview to see the six most common errors and how to repair them. If the equipment still does not work properly, please contact your contract partner.

Problem	Cause	Solution
Drive discs wobble or make noises	Drive pulley is loose	Tighten nuts
Display does not work	No plug connection, power supply not plugged in	Check all plug connections and see if the power supply is plugged in
Footplates are creaking	Footplates are loose	Tighten up the footplate screws
Creaking noises	Screws are loose	Check screws are properly tightened
Guide rails are squeaking	Guide rails or rollers are dirty or the guide rails are dry	Clean the guide rails, then lubricate with a non greasy silicone
No pulse reading	• Sources of interference in the room • Using a chest strap: - Unsuitable chest strap - Chest strap is incorrectly positioned - Batteries are discharged	• Eliminate sources of interference (e. g. mobile phone, loudspeaker, etc.) • Use a suitable chest strap (see recommended accessories) • Reposition the chest strap and/or moisten the electrodes • Change the batteries

2.3 Maintenance and service calendar

The following routine work must be done in the specified time intervals:

Part	Weekly	Monthly	2x annually	Annually
Display console	C	I		
Lubricate the moving parts			I	
Plastic cover	C	I		
Screws and cable connections		I		
Legends: C = cleaning; I = inspect				

3.1 Package contents

The package contains the parts represented in the illustration, including a power cable with mains plug. If one of the illustrated parts is missing, please contact your contract partner.

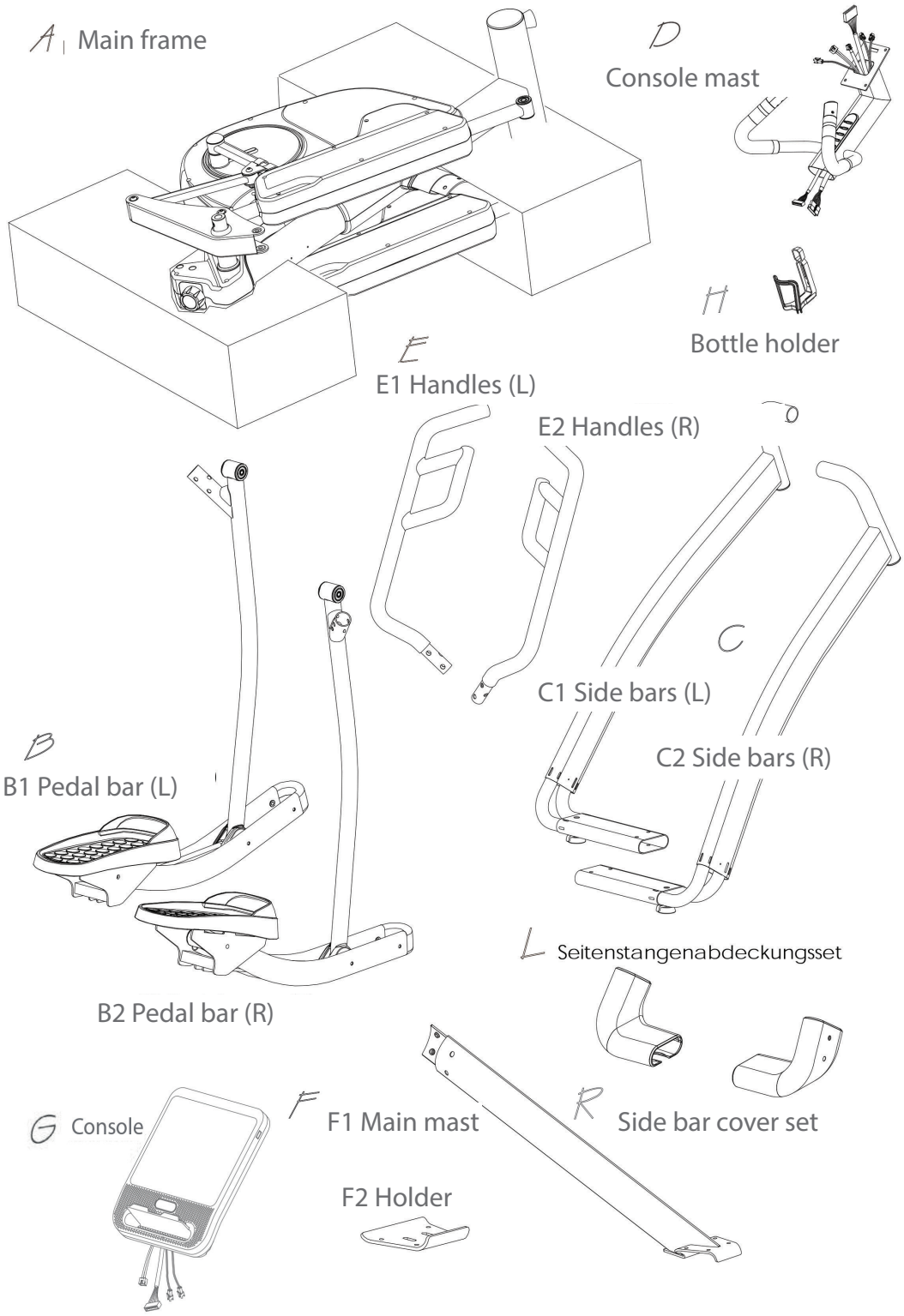

(J2) Screws M4x16

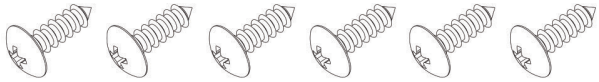

(J3) Screws M4x6

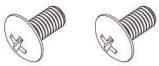

(J4) Screws M8x55

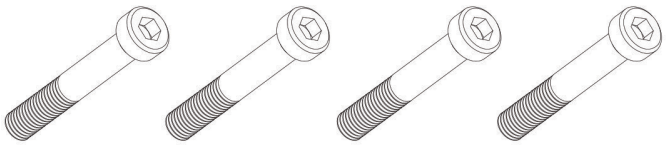

(J5) Washers M8

(J6) Screws M8x20

(J7) Screws M12x73

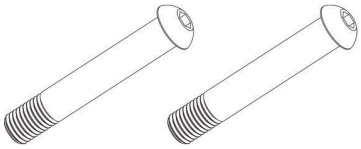

(J8) Washers M12

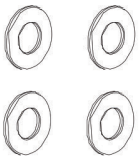

(J9) Nuts M12

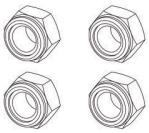

(J10) Screws M12x109

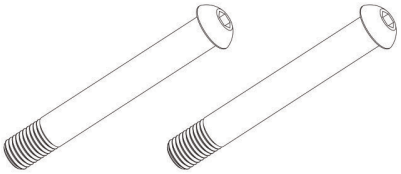

(J13) Screws M8x16

(J14) Screws M5

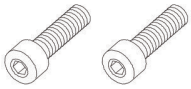

4m/m

5m/m

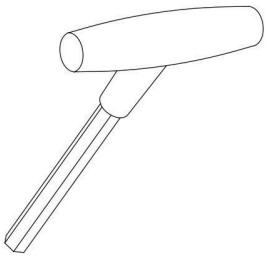

6m/m*2

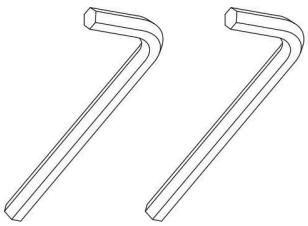

#19

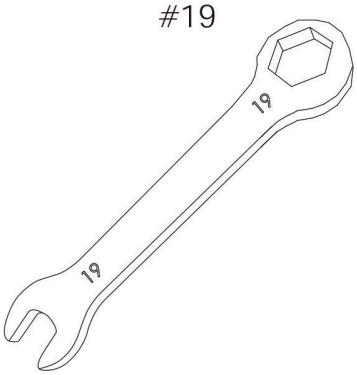

3.2 Assembly instructions

Before starting assembly, look carefully through the individual assembly steps shown and assemble the equipment in the order indicated.

Caution while unpacking:

Place box flat on the ground, remove cover. Unpack handles, side supporting bars, pedal bars and operating instructions. Remove the upper foam parts (1) and (2) and take out the console, console supporting tube, console mast, pedal supporting bars and hardware bag. First leave the main frame (A) and lower foam parts (3) and (4) in the box.

Note: For safety reasons, the pedal bars are just to be released with the respective control knob once you are asked to do so at the end of the instructions.

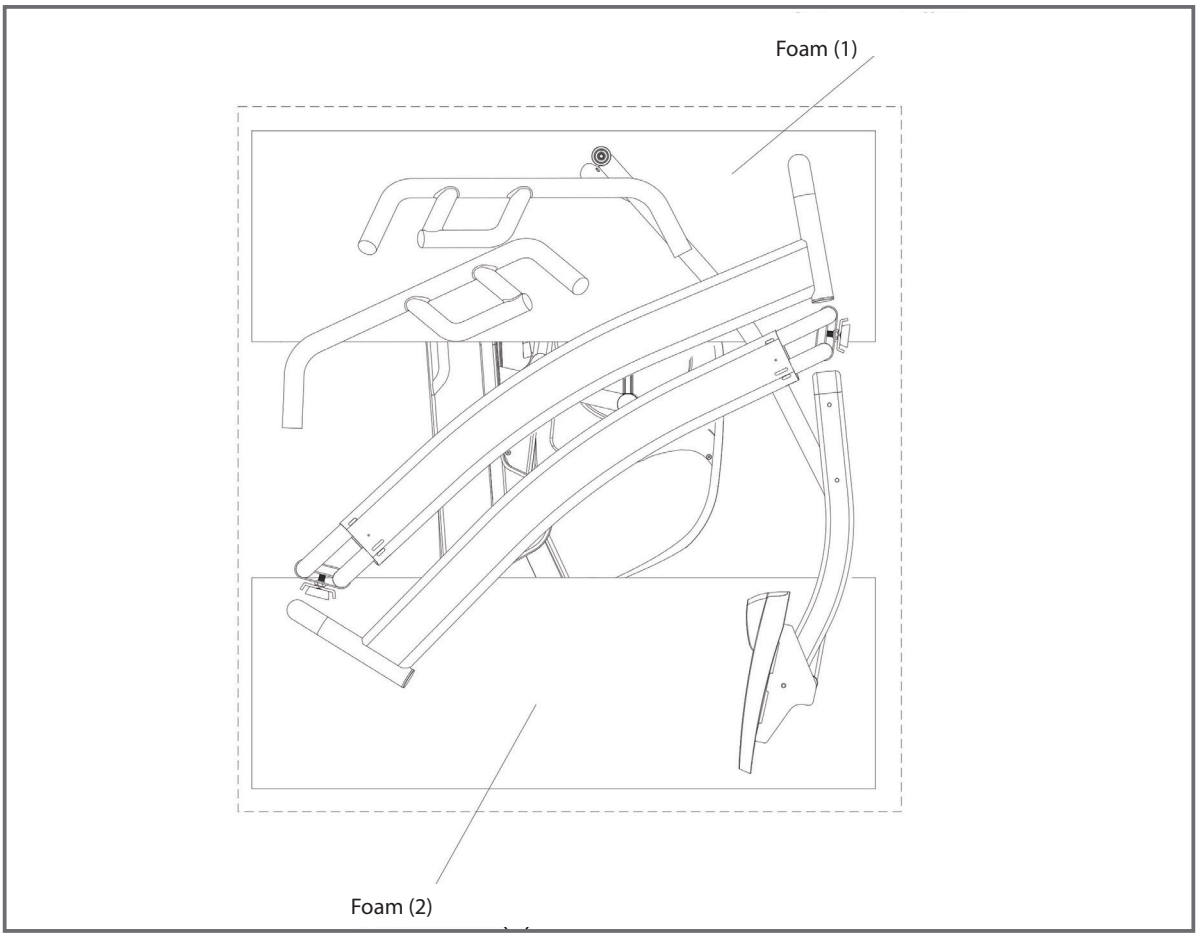

Step 1: Assembly of the main mast (F1)

(1) Loosen two screws (F5) from the main frame (A) and two screws from the main mast (F1).
(2) Connect the main mast (F1) with the main frame (A) with the previously loosened four screws (J1).

Note: Before you continue with step 2 of the assembly, make sure that the four screws (J1) are tightened.
Tool: 6mm Allen key

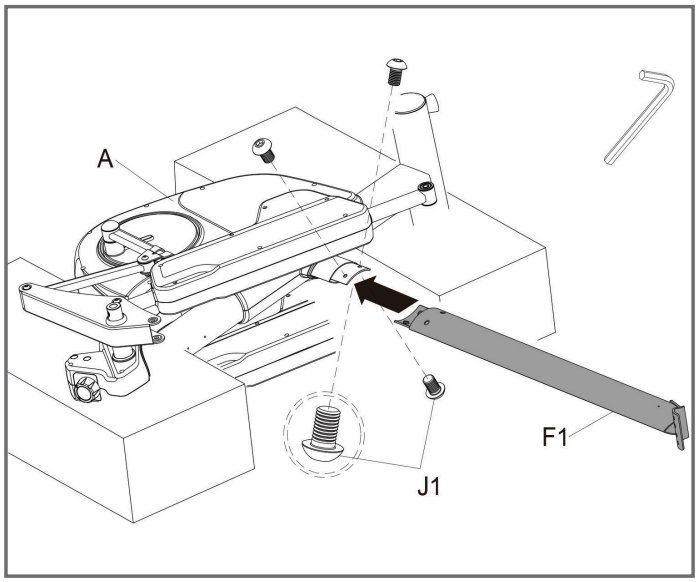

Step 2: Assembly of the side bar cover sets (L+R)

(1) Mount the right side bar cover (R1) with a screw (J2) on to the cover (R1).
(2) Follow steps 2-1 to 2-4 in order to tighten the side bar cover sets.
2-1. Connect the covers (R1 & R2) on the right connection bar (C2).
2-2. Connect the cover (R3) to the bar (C2).
2-3. Connect the cover (R4) to the bar (C2).
2-4. Secure the covers with the screw (J3) first and then with two screws (J2) as illustrated.
(3) Repeat the same steps as described before in order to assemble the left side bar cover set.

USE THE TOOL: 4mm (Phillips screwdriver)

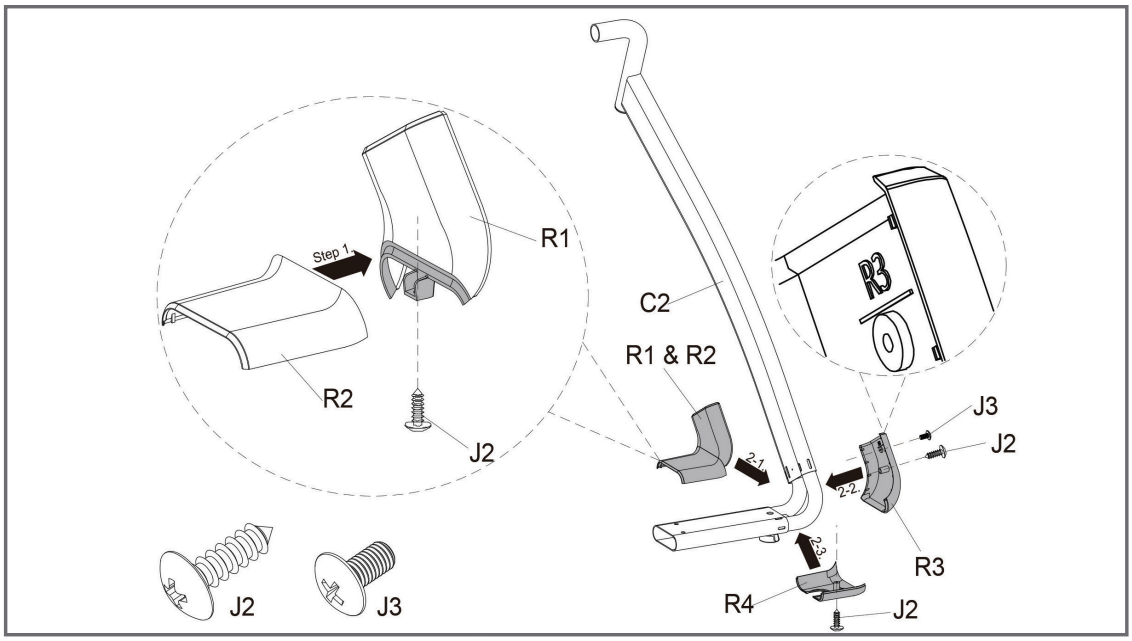

Step 3: Assembly of the right side bar (C2)

(1) Mount the right side bar (C2) on the main frame (A) with a screw (J8) on top (figure A) and two screws (J5) including washers (J5) with the bracket (F2) on the bottom (figure B).
Note: Do not tighten the screws (J6 and J4) completely yet.
(2) Raise the main frame (A) with two people and remove the foam (see figure on the right).

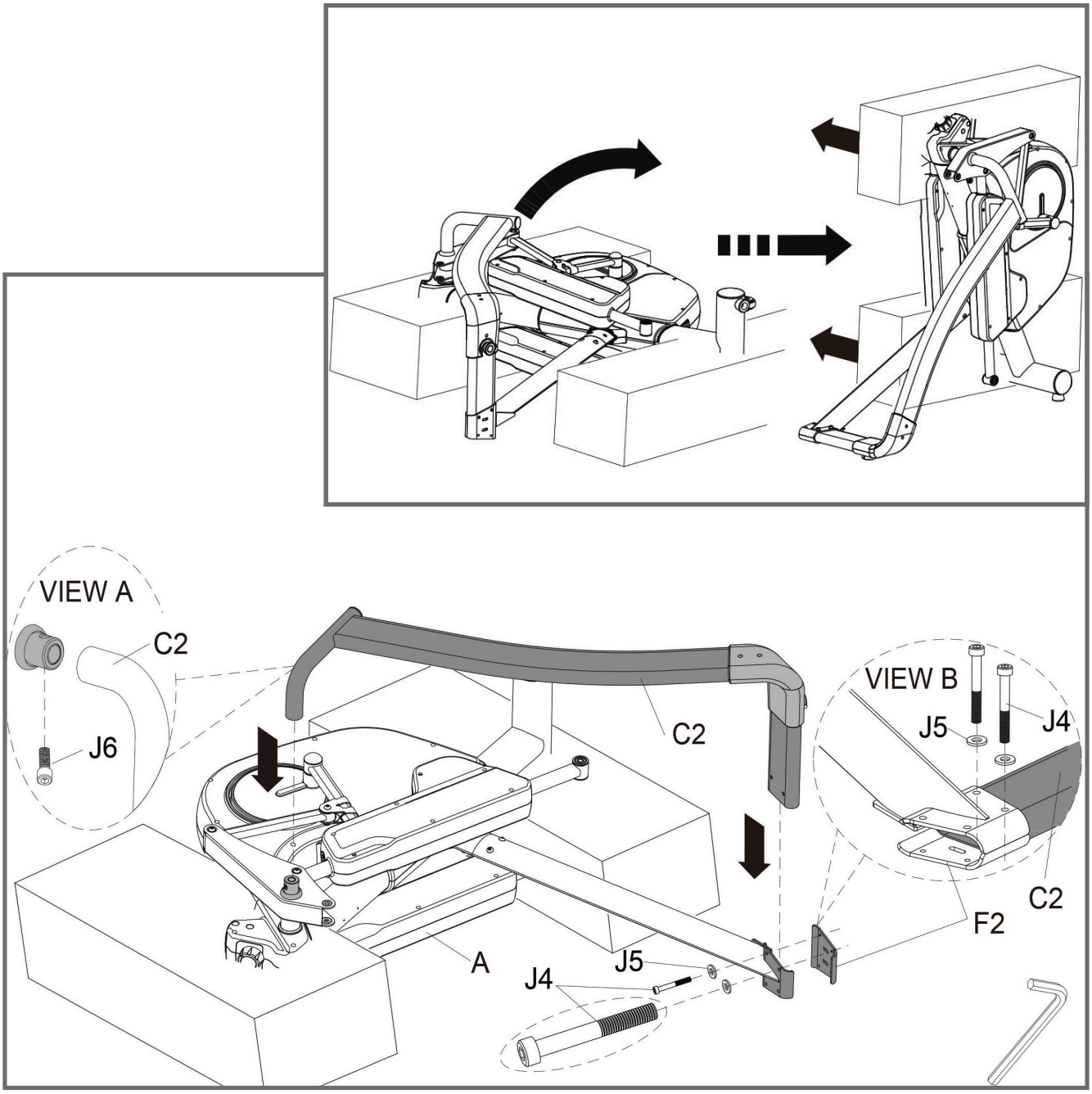

Step 4: Assembly of the left side bar (C1) and covers

1) Connect the left side bar (C1) on the main frame (A) with a screw (J6) on top and two screws (J2) and the bracket (F2) on the bottom (see step 2).
(2) Now you can tighten all of the screws from the previous steps (J6, J4).

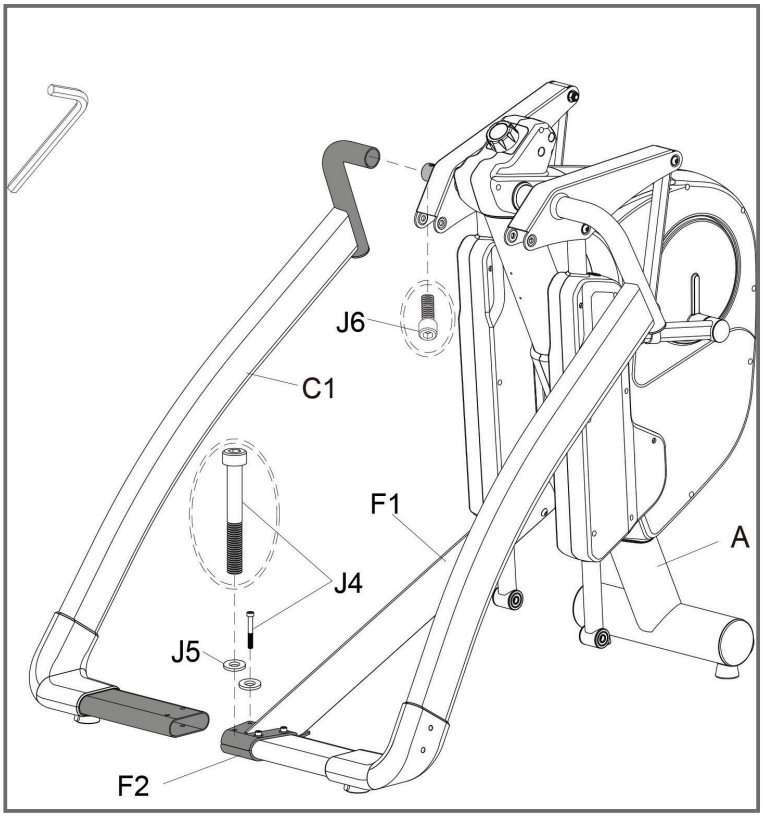

Step 5: Assembly of the pedal bars

(1) Connect the right pedal bar (B2) on the top with the main frame (A) and mount it with the nuts (J9), washers (J8) and screws (J3) as in figure C.
(2) Mount the pedal bar on the bottom of the main frame with a bolt (J5), a washer (J8) and a nut (J9) as in figure D.
(3) Tighten the bolts (J5) and the nuts (J9); see figure E.
(4) Repeat the process for the left pedal bar (B1).

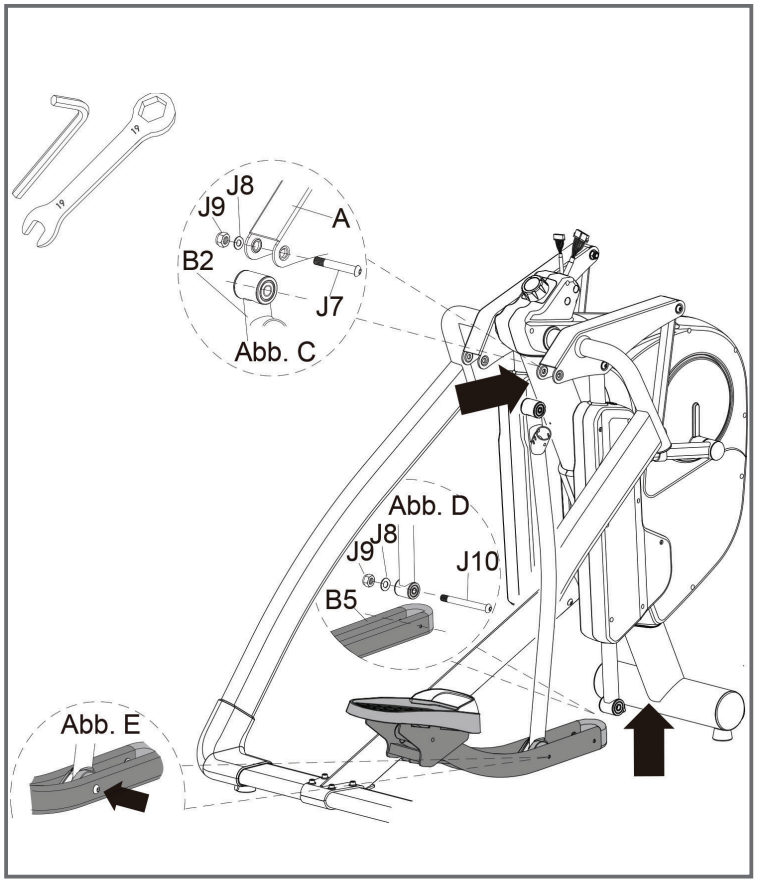

Step 6: Assembly of the handles

(1) Loosen the six pre-mounted screws (J12 and J11) from the left handle (E1).
(2) Connect the left handle (E1) with the main frame (A) by tightening all screws (J12 and J11) with two 6mm Allen keys; see figure F.
(3) Repeat the process for the right handle (E2).

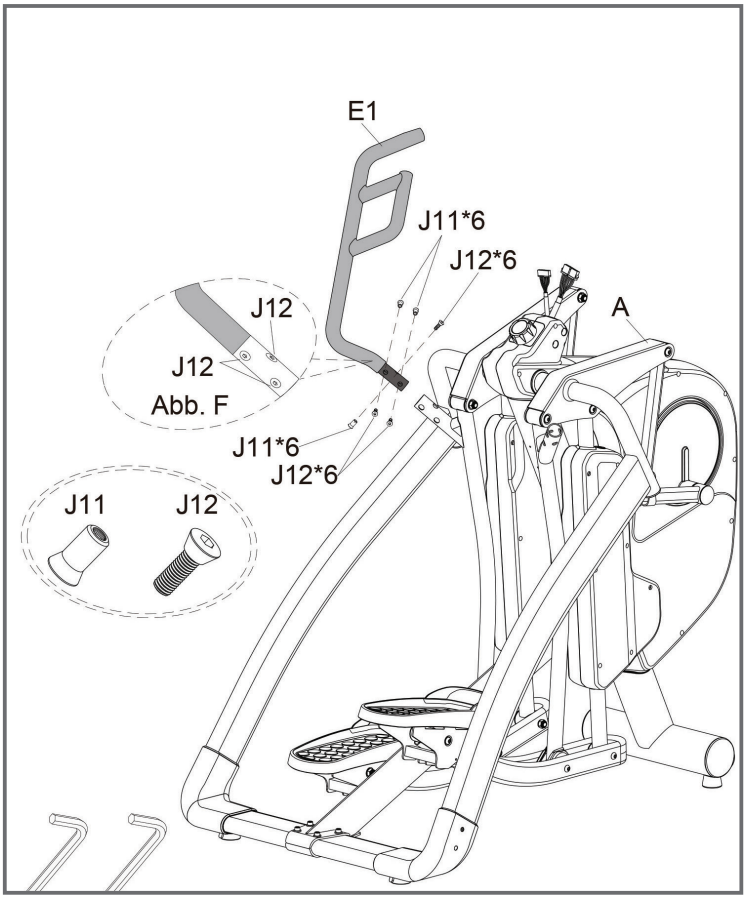

Step 7: Assembly of the console mast and the bottle holder

(1) Connect the cable (D1 and D2) from the console mast (D) with the cables (A1 and A2) from the main frame (A).
(2) Mount the console mast (D) on the main frame (A) with two screws (J3) and two pre-mounted screws (J13); see figure G.
(3) Mount the bottle holder (H) on the main frame (A) with two screws (J14).

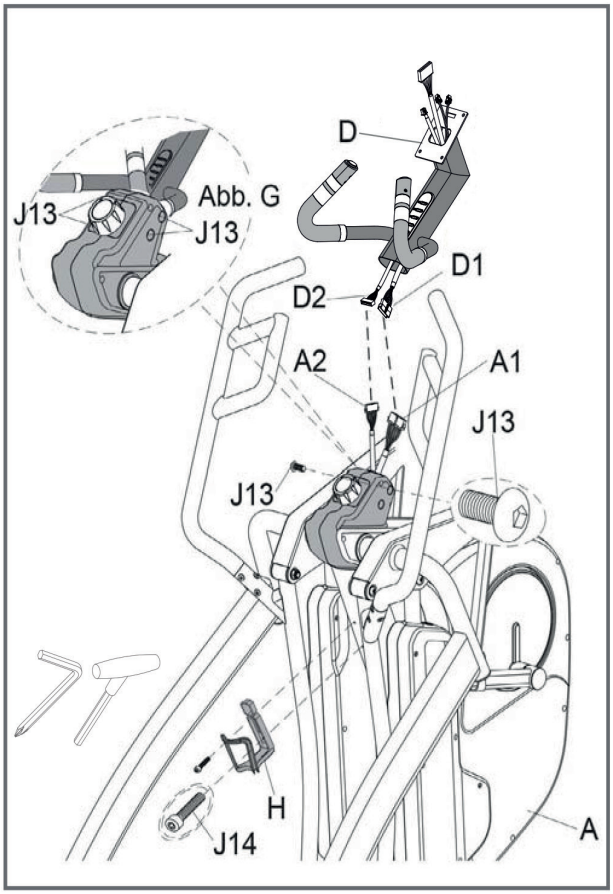

Step 8: Assembly of the console and setting the supporting feet

(1) Loosen the four pre-mounted screws (G1) from the console (G).
(2) Connect the console cables (D1, D2, D14 & D16) and the heart rate cable (D4) from the console mast with the console.
Note: Make sure that the cables are properly connected with each other. Slide the excess cable into the casing and the console mast (D).
(3) Mount the console (G) on the console mast (D) with the four screws (G1).
(4) Use the adjusting screws under the side parts in order to level out any unevenness in the floor.

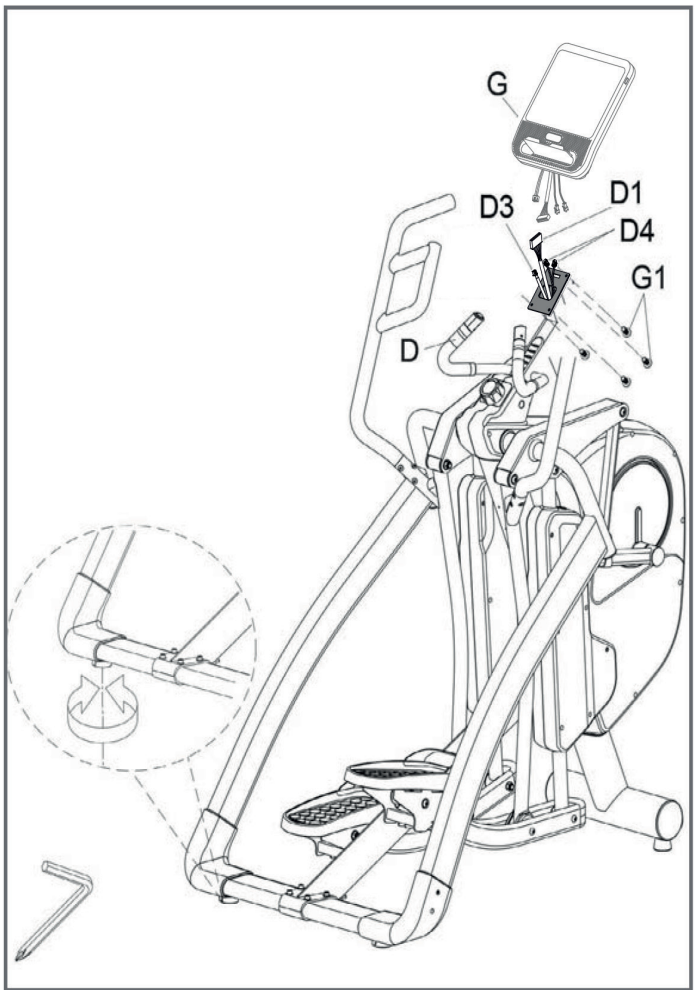

Step 9: Locking the pedal bars (B1 and B2)

The pedal bars should always be locked if the equipment is not being used.

To do this, turn the knob (A3) to the "LOCK" position in order to lock the pedal bars (B1 and B2) and avoid possible injuries.

Note: Never lock the pedal bars if the equipment is still moving, but rather only when the equipment has come to a complete standstill.

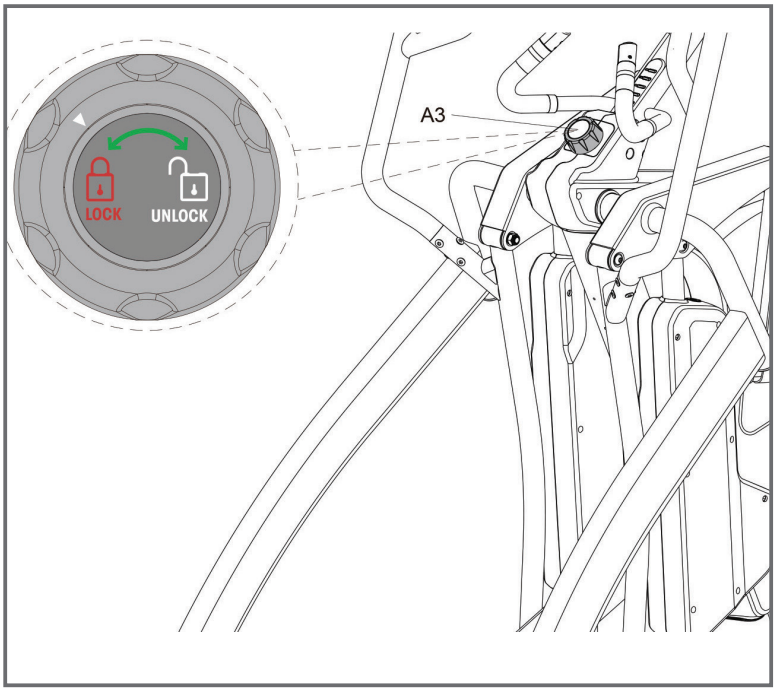

Step 10: Transport

While transporting the equipment, make sure that the pedal bars are locked.

Then lift the equipment on the side bars until the transport wheels touch the ground. Now you can move the equipment to your desired place. Carefully lower the equipment again when you are done.

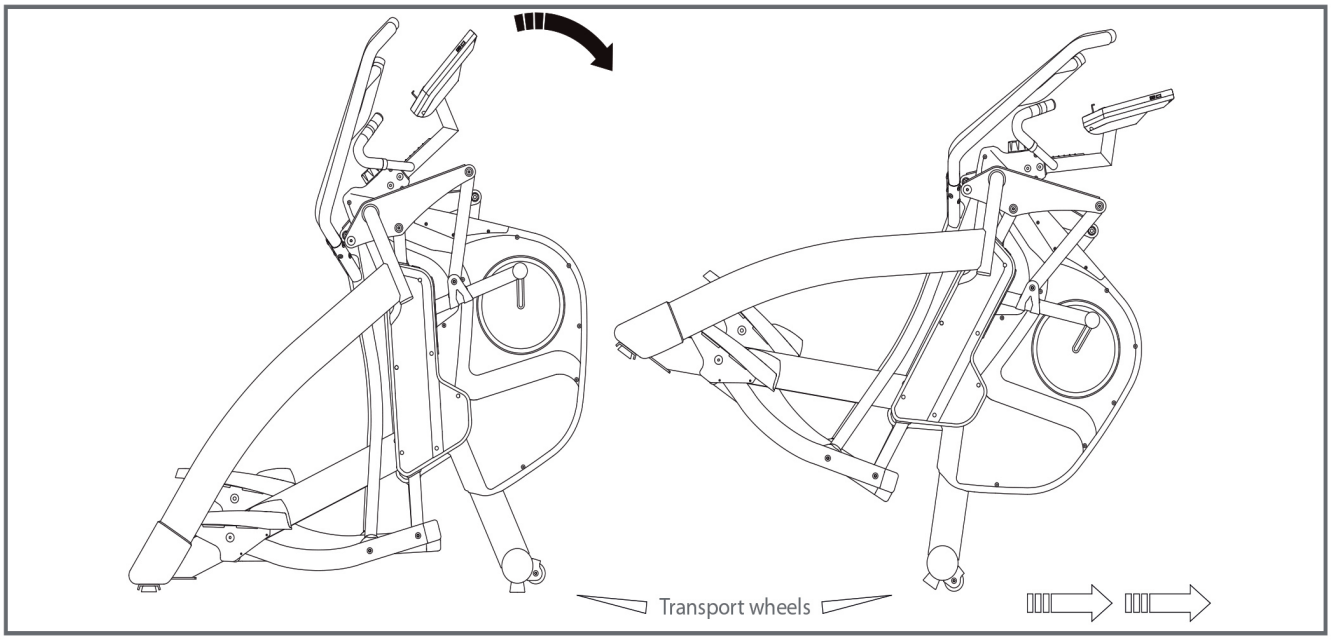

Step 11: Connecting the power cable

(1) Connect the cable to the plug on the main frame, before you plug the other end in to the socket.

**The overload switch protects from short circuits. The button jumps out in case of overload. Turn the power switch off and then on again to restart the equipment

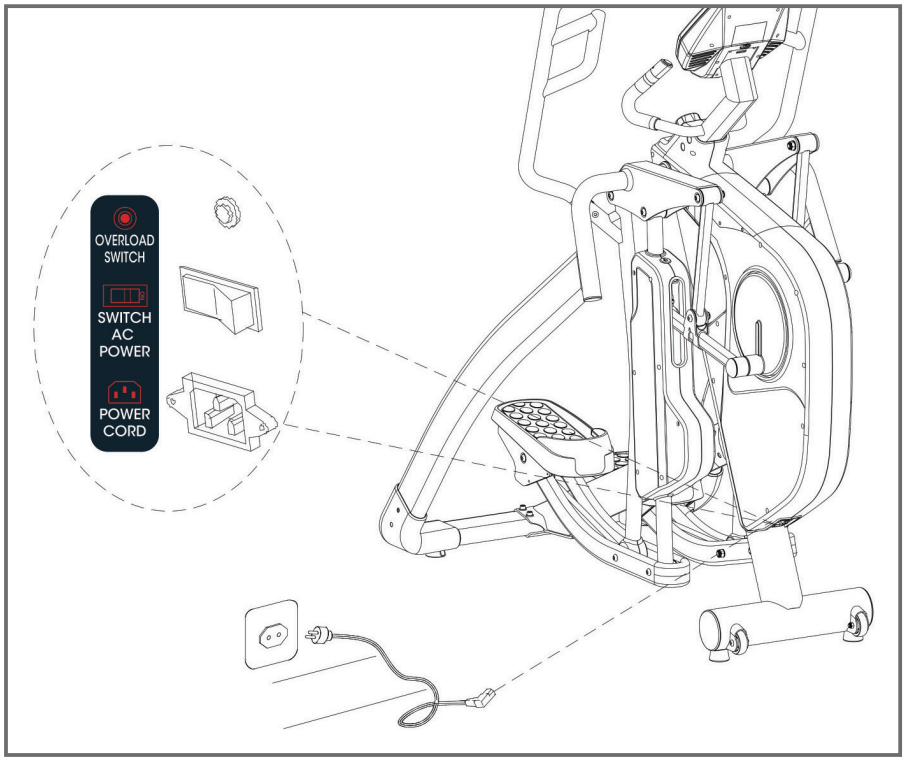

Step 12: Function buttons to adjust the stride length:

1) There is a button on the left and right small handles of the console mast.
The left button has the following function: The fine, infinitely variable reduction of the current stride length. The right button has the following function: The fine, infinitely variable increase of the current stride length.
2) If the stride length is reduced, the DOWN signal on the function button will light up in green.

If the stride length is increased, the UP signal on the function button will light up in red.

The button for adjustments will not react as long as the stride length is being changed through the button and the LED light is blinking. The button only works if the LED light is illuminated. If there are disruptions while training, simply press any stride length adjustment button and the training can be continued.

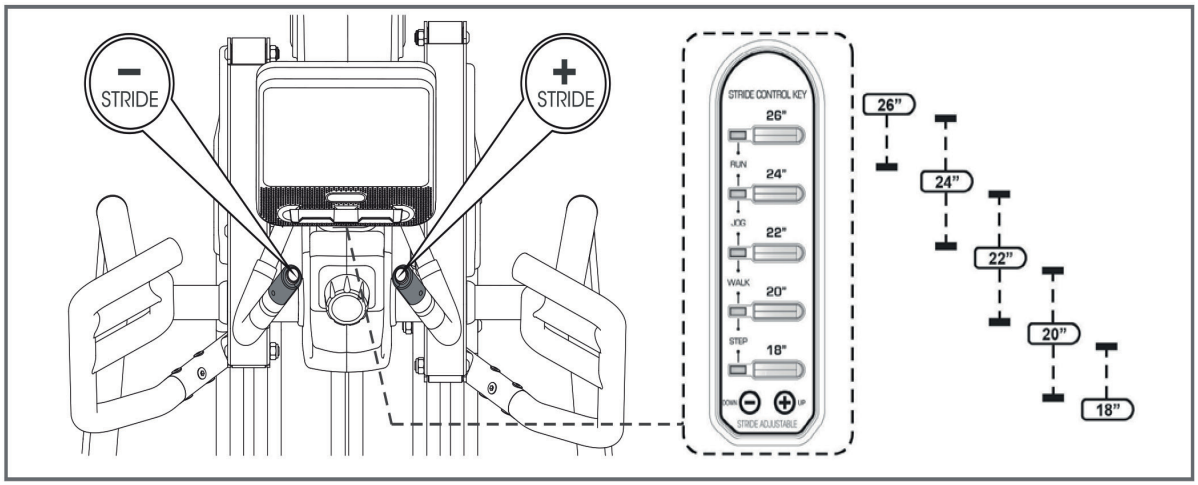

Step 13: Setting the stride length via the incline motor

Corresponding to personal requirements, the stride length, as shown on the LED display, can be set or changed to 18", 20", 22", 24" or 26". There are five quick selection buttons to set the stride length. Press one of the 18" - 26" buttons to set the desired stride length. You can change the stride length at any time during training. The selected stride length is displayed through the blue LED light.

There are different reasons for a user wanting to change the stride length. First because of the height. A user who is smaller than 1.65m could feel more comfortable with a stride length of 18" (approx. 46 cm) to 22" (approx. 56 cm), while a user who is taller than 1.65 cm could feel more comfortable with a stride length of 22"(approx. 56 cm) to 26" (approx. 66 cm), because they can compensate for their stride length. Furthermore, a user must adjust the stride length with higher speeds in order to compensate for their normal stride length while jogging/running. Another reason why a user may want to change the stride length during training is so that different muscle groups can be worked; a short stride length is demanding for different muscles in the legs and body than a long stride length. A stride length of 18" (approx. 46 cm) can be compared with a shorter kick motion and a stride length of 26" (approx. 66 cm) with a lunge without high stress, which would cause the same movement on a flat surface.

During training, adjusting the resistance or doing squats while holding on to the handle bars helps to isolate these muscles.

Note: There is no right or wrong stride length for every usage. Select the stride length where you feel the most comfortable.

Note: Always contact a personal coach on-site for extensive training details.

Note: If the stride length motor is activated, you will hear how the motor unlocks and gets set. As soon as the motor has reached the desired stride length, you will hear a click and the motor will lock into the corresponding position.

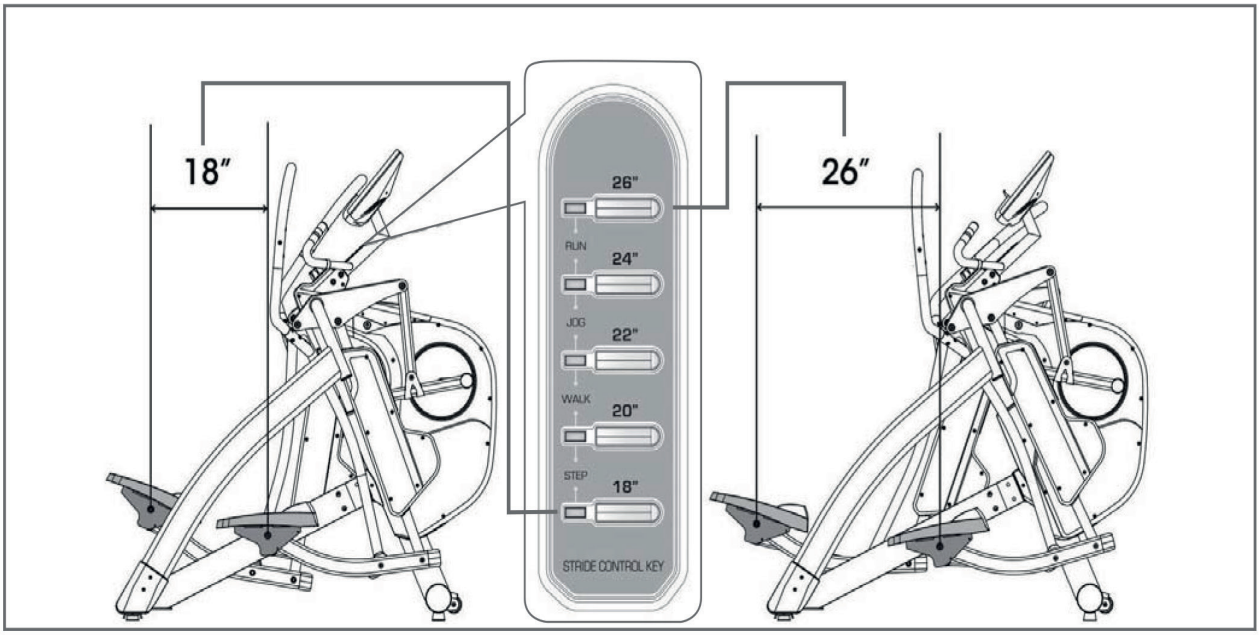

4.1 Function Descriptions

1. Console functions

(1) MANUAL: Manually set training
(2) PROGRAM: Pre-set training profiles
(3) WATT CONTROL: Training program controlled by Watt value
(4) H.R.C. (Heart Rate Controlled): You can set a heart rate target of 55 %, 75 %, 90 % from your maximum heart rate (automatically set)
(5) RECOVERY: Fitness test of the recovery of your heart rate (F1~F6)
(6) USER DATA: Saving user profiles (U0~U4). U0 (guest profile not saved) U1~U4 (user profiles saved). (Name, Age, Height, Weight, Gender)
(7) COMMUNITY: A selection of multimedia functions
(8) FACTORY SETTING MODE:
a. WLAN, Volume, Brightness, change metric units, Updates

2. Main function

(1) QUICK START BUTTON
a. When the console is in SLEEP Mode, the console can be activated with this button.
b, When the console is in STAND-BY Mode, the machine can be started with this button
(2) Operating the TFT display:

All actions are activated on the TFT display.

4.2 Console display

1. TIME:
(1) Display range: 0:00 ~ 99:59
(2) Setting range: 0 ~ 99 (minutes) (The value can be directly entered with the numerical pad)
(3) Display bar: Cell amount - 10 cells (MAX= 60 minutes, display full cells)
When no settings are set: 60 minutes / 10 cells = 6 minutes / cell
When settings are set: Setting value / 10 cells
(4) When no value is set, the default setting is counting up from 0:00 (after 99:59 it returns to 0:00).
(5) When a value is set, the default setting is counting down from the value to 0:00. At 0:00 the console pauses and saves training data.

2. SPEED:
(1) Display range: 0.0 ~ 99.9 (km or ml)
(2) Display bar: Cell amount – 10 cells (MAX = 60 km, display full cells, = 6 km / cell)
(3) The value will be displayed 3 ~ 4 seconds after input.
(4) The value will return to 0 if no input is detected for 4 ~ 6 seconds.

3. RPM (Revolutions per minute):
(1) Display range: 0 ~ 999
(2) Display bar: Cell amount - 10 cells (MAX= 120 RPM, display full cells, = 12 RPM / cell)
(3) The value will be displayed 3 ~ 4 seconds after input.
(4) The value will return to 0 if no input is detected for 4 ~ 6 seconds.

4. DISTANCE:
(1) Display range: 0.0 ~ 60 ?? (km or ml)
(2) Setting range: 0 ~ 99 (The value can be directly entered with the numerical pad)
(3) Display bar:: Cell amount - 10 cells (MAX= 10.0 KM, display full cells).
When no settings are set: 10.0 KM / 10 cells = 1.0 KM / cell
When settings are set: Setting value / 10 cells

(4) When no value is set, the default setting is counting up from 0 (after 99.9 it returns to 0.0).
(5) When a value is set, the default setting is counting down from the value to 0.0. At 0.0 the console pauses and saves training data.

5. CALORIES:
(1) Display range: 0 ~ 999
(2) Setting range: 0 ~ 990?? (The value can be directly entered with the numerical pad)
(3) Display bar:: Cell amount - 10 cells (MAX= 150 CAL, display full cells).
When no settings are set: 150 CAL / 10 cells = 15 CAL / cell
When settings are set: Setting value / 10 cells
(4) When no value is set, the default setting is counting up from 0 (after 999 it returns to 0).
(5) When a value is set, the default setting is counting down from the value to 0:00. At 0:00 the console pauses and saves training data.

6. PULSE:
(1) Display range: 0 ~ 230
(2) Setting range: 0 ~ 230 (The value can be directly entered with the numerical pad)
(3) Display bar: Cell amount - 10 cells (MAX= 120, display full cells, = 12 / cell)
(4) Displays detected heartbeat when no value is set.
(5) When a value is set, the detected heartbeat is displayed and when the heartbeat exceeds the set value, the console will beep.
(6) The beep is 2 times within 1 second.

7. WATT:
(1) Display range: 0~999
(2) Setting range: not settable
(3) Display bar: Cell amount - 10 cells (MAX = 350, display full cells, 35 / cell)
(4) Cells will display RPM & LOAD accordingly (WATT console)

8. LOAD:
(1) Display range: 1 ~ 16
(2) Setting range: 1 ~ 16
(3) Display Bar: Cell amount - 16 cells (MAX = 16, display full cells)

9. USER:
(1) Users: U0~U4
(2) U0 guest profile and is not saved.
(3) Profiles U1~U4 can be saved after being set.
(4) AGE, HEIGHT, WEIGHT, USER NAME, GENDER can be set and stored.
AGE: Setting range: 1 ~ 99 (Default: 25)
HEIGHT: Setting range: 100 ~ 250 cm (Default 160 cm)
40 ~ 99 inches (Default 60 inches)
WEIGHT: Setting range: 20 ~ 150 kg (Default 50 kg)
40 ~ 350 pounds (Default 100 pounds)
DEFAULT USER NAME: XXXXXXXXXX
GENDER: MALE / FEMALE

4.3 Starting up settings

(1) Console will display power up image, after approx. 30 seconds the console will enter the main menu (fig. 1) in which the main function panel is shown.

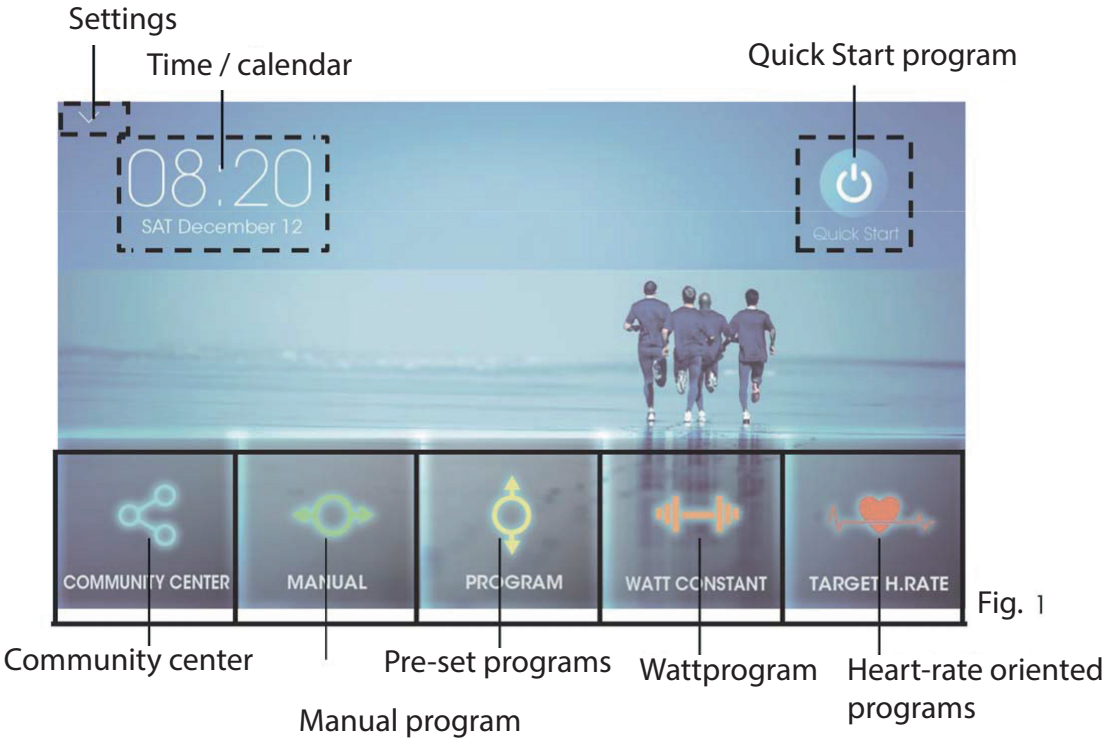

Fig. 1

(2). In the main menu, press on the "time/calendar box" to set the time and date. Default setting 01.01.2018

Fig. 2

Fig. 3

*** After pressing the "time/calendar box", you can activate "Automatic date & time" (fig. 2) and choose a time zone from "select time zone" menu (fig. 3).
(3). In the main menu press the QUICK START button to start the QUICK START function.

(4). In the main menu press the downward button to enter the FACTORY SETTING MODE. WIFI, Volume, Brightness, Metric unit switch, About. (fig. 4)

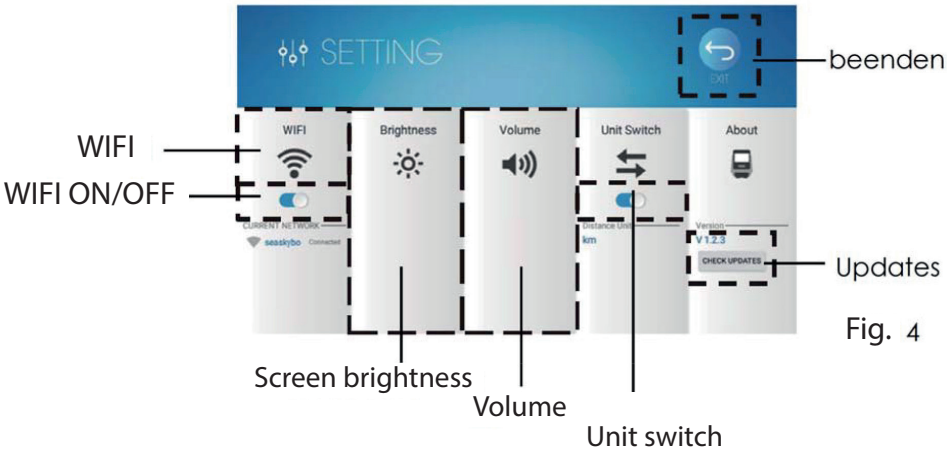

Fig. 4

Fig. 5

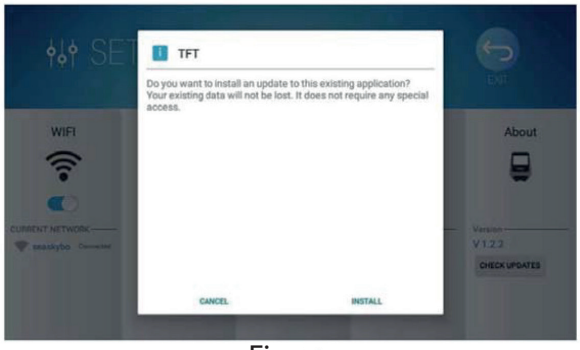

Fig. 6

*** The console version is shown in the about section. If you press the CHECK UPDATES button, the console will automatically check if the latest version is installed.
*** If the consoles detects a newer version, you can choose to download it. After it completely downloading the version press the install button to finish the installation process (fig. 5 & fig. 6)

(5). Choose one of the following programs.

4.4 Programs

4.4.1 Quick-Start program

Press the QUICK START button in the main menu to start the QUICK START function. The console will then display the image shown in fig. 7.

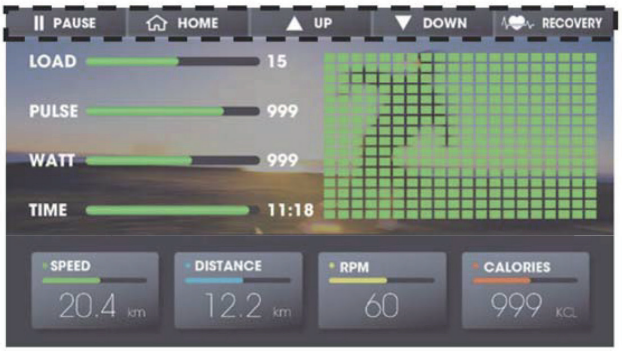

Fig. 7

(1) Press the UP or the DOWN button to adjust the load.
(2) Press the PAUSE button to pause your training. Press the CONTINUE button to continue with your training (fig. 8)
(3) Press the RECOVERY button to start the said function. After 60 seconds a result will be displayed. To return to the starting page, press any place on the display.
(5) Press the HOME button to return to the starting page.

Fig. 8

4.4.2 Manual program

(1) Press MANUAL in the main menu to open the manual program.
(2) Choose a user („U0~U4“). The respective user data will be displayed. (U0 is the guest users' profile, training data is not saved here).
(3) Enter your AGE, HEIGHT, WEIGHT and SEX. Press on „USER“ to enter a name.
(4) Set a desired value for TIME, DISTANCE and CALORIES (fig. 13).
(5) Press the EXIT button to return to the starting page.
(6) If you do not enter a value for either TIME, DISTANCE or CALORIES, the console will count up (fig. 14).

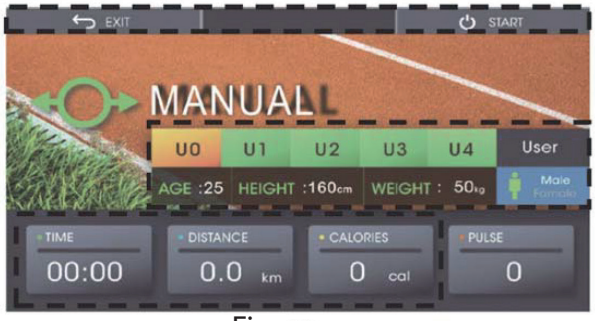

Fig. 13

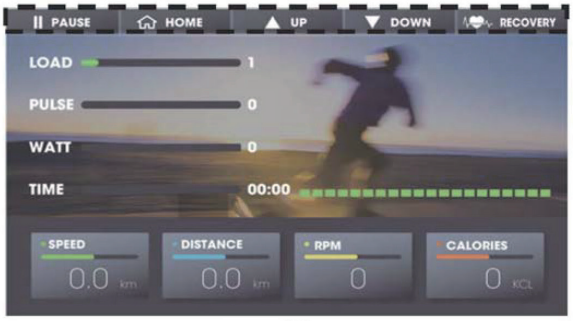

Fig. 14

(7) If you enter a value for TIME, DISTANCE or CALIORIES the console will count down respectively. Once on of the values has reached 0, the system will stop and return to the starting page.
(8) Press the UP or DOWN button to adjust the load.
(9) Press the PAUSE button to pause your training. (fig. 15). Press the CONTINUE button to continue with your training.
(10) Press the RECOVERY button to start the said function. After 60 seconds a result will be displayed. Drücken Sie während des Work-Outs auf das RECOVERY, um die RECOVERY-Funktion zu starten. To return to the starting page, press any place on the display.
(11) Press the HOME button to return to the starting page.

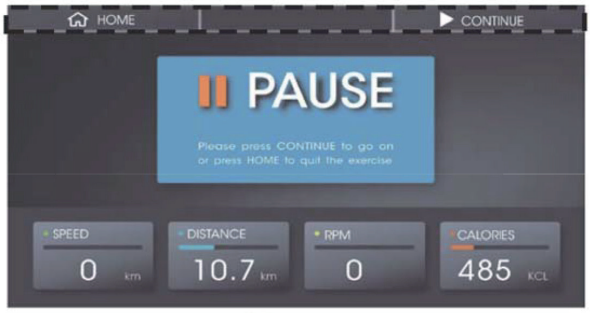

Fig. 15

4.4.3 Pre-set programs

(1) Press PROGRAM in the main menu to open the pre-set programmes (fig. 16).

Fig. 16

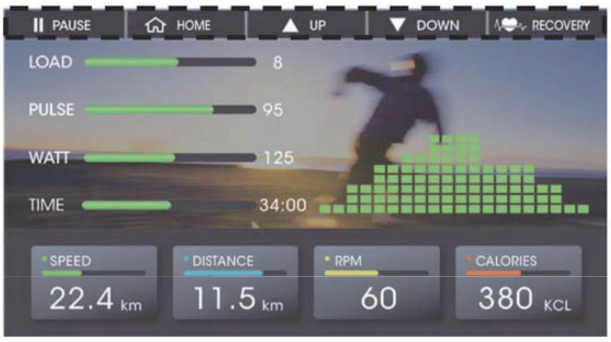

Fig. 17

(2) Choose one of the 12 pre-set training profiles.
(3) Choose a user („U0~U4“). The respective user data will be displayed.
(4) Enter a value for TIME. Enter your AGE, HEIGHT, WEIGHT and SEX. Press on „USER“ to enter a name.
(5) Press the EXIT button to return to the starting page. Press the START button to start the program. The console will display the respective values for LOAD, PULSE, WATT, SPEED, DISTANCE, RPM, and CALORIES (fig. 17).
(6) When you entered a value for TIME and it reaches 0, the console will stop and return to the starting page.
(7) Press the UP or DOWN button to adjust the load.
(8) Press the PAUSE button to pause your training. (fig.18). Press the CONTINUE button to continue with your training.
(9) Press the RECOVERY button to start the said function. After 60 seconds a result will be displayed. To return to the starting page, press any place on the display.
(10) Press the HOME button to return to the starting page.

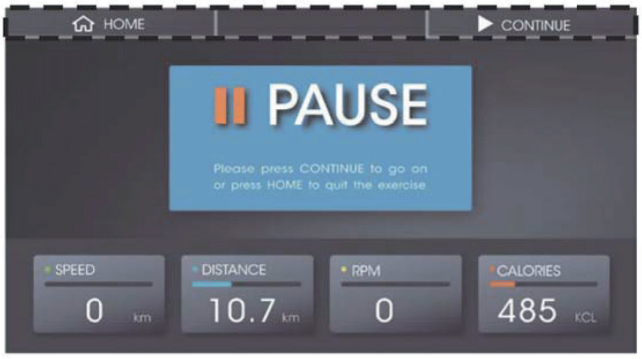

Fig. 18

4.4.4 Wattprogram

(1) Press WATT CONSTANT in the main menu to open the wattprogram (fig. 19).

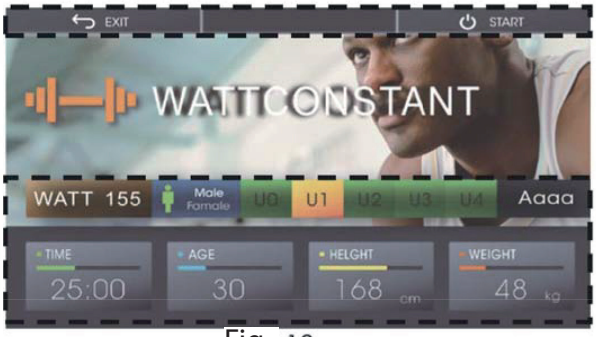

Fig. 19

Fig. 20

(2) Pess WATT to enter a desired watt value (default: 125 W).
(3) Choose a user („U0~U4"). The respective user data will be displayed.
(4) Enter a value for TIME. Enter your AGE, HEIGHT, WEIGHT and SEX. Press on „USER" to enter a name.
(5) Press the EXIT button to return to the starting page.
(6) Press the START button to start the program. The console displays the respective values for SPEED, RPM, TIME, DISTANCE, CALORIES and WATT (fig 20).
(7) If you entered a time, and 0 is reached, the console will stop and return to the starting page.
(8) TARGET WATT CONSTANT DATA: The value will be displayed according to WATT setting.
REAL WATT CONSTANT DATA: Displays actual work out WATT value.
LOAD CONTROL DATA : LOAD shows target WATT value that pair with the LOAD value.
(9) Press the PAUSE button to pause your training. Press the CONTINUE button to continue with your training (fig. 21)
(10) Press the RECOVERY button to start the said function. After 60 seconds a result will be displayed. To return to the starting page, press any place on the display.
(11) Press the HOME button to return to the starting page.

Fig. 21

(12) WATT will be displayed according to the current speed.
Too slow: Please accelerate your speed. Actual watt value < Set watt value (1-25%)
Moderate: Please keep current speed. Set watt value (1+25%)> Actual watt value > Set watt value (1-25%)
Too fast: Please slow down your speed. Actual value >Set value (1+25%)

4.4.5 Heart rate oriented programs

There are four different heart rate-oriented programs. Either choose one of the pre-set target heart rates (55%, 75% or 90% of your maximum heart rate) or choose „TAG“ to set a target heart rate yourself. Your maximum heart rate is calculated depending on your age. We recommend a chest strap for these programmes.

(1) Press the TARGET H.RATE button to open the heart rate oriented programs (fig. 22).

Fig. 22

Fig. 23

(2) Either choose TAG, 90 %, 75 % or 55 % (fig. 23).
(3) Choose a user („U0~U4“). The respective user data will be displayed.

Fig. 24

(4) Enter a value for TIME. Enter your AGE, HEIGHT, WEIGHT and SEX. Press on „USER“ to enter a name.
(5) Press the EXIT button to return to the starting page.
(6) Press the START button to start your training. The console will display the respective values for SPEED, RPM, TIME, DISTANCE, CALORIES and WATT (fig. 24).
(7) If you entered a time, and 0 is reached, the console will stop and return to the starting page.
(8) If your heart rate does not reach the set value, increase the LEVEL at 30 second intervals. In case your heart rate surpasses the set value, decrease the LEVEL at 15 second intervals immediately. In the event that your heart rate is still higher than the set value even though you have reached the lowest LEVEL, the console will pause automatically for your own safety.

(10) The console will return to the starting page, if it does not receive a signal for longer than 30 seconds.
(11) Press the PAUSE button to pause your training. Press the CONTINUE button to continue with your training
(12) Press the RECOVERY button to start the said function. A result will be displayed after 60 seconds. To return to the starting page, press any place of the display.
(13) Press the HOME button to return to the starting page.

4.4.6 RECOVERY function:

(1) Press the RECOVERY button during your training to start the said function directly (fig. 25).
(2) Put your hands around the hand sensors. The result will be displayed after 60 seconds (fig. 26).

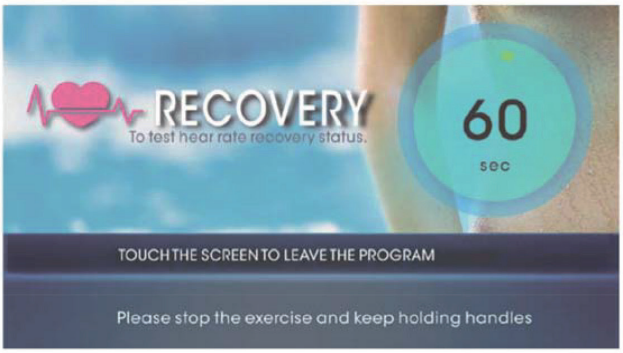

Fig. 25

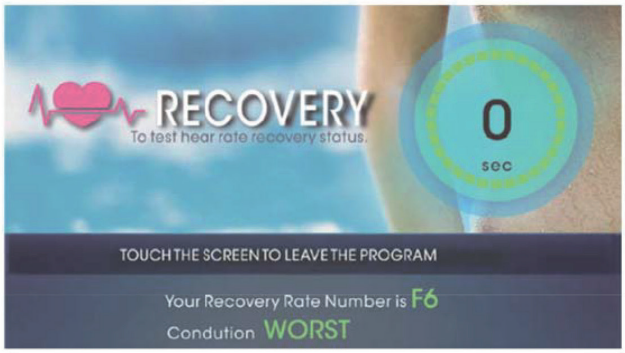

Fig. 26

(3) In case you wish to stop this function midway, simply press any place of the display.
(4) Once 0 is reached the console will display your result in form of a number (F1~F6) and its respective rating. Press on any place of the display to return to the starting page.
(5) Possible results

F1	(Outstanding)
F2	(Excellent)
F3	(Good)
F4	(Fair)
F5	(Below average)
F6	(Poor)

4.5 Media

(1) Press COMMUNITY CENTER to open this function. The following screen will appear on the display (fig. 9).

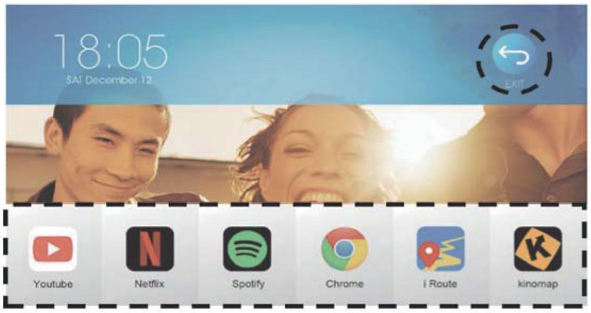

Fig. 9

Fig. 10

(2) Choose one of the provided multimedia functions (fig. 10).
(3) Slide the left arrow to the right to open the options HOME / QUICK START/ VOLUME and EXIT (fig. 11)
(4) In case there is no activity for 3 seconds, the brightness level of the display decreases by 50%. You can press the "< " button to hide the function panel.

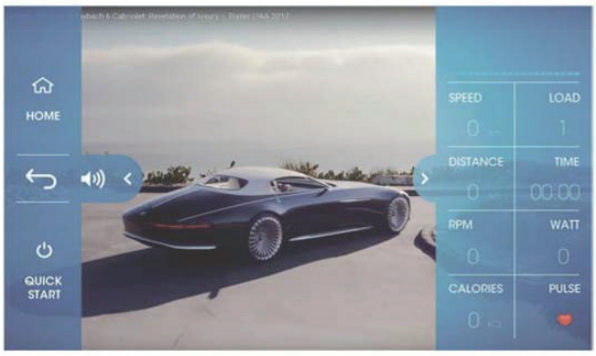

Fig. 11

Fig. 12

(5) Slide the right arrow to the left to open the values displays for SPEED / LOAD / DISTANCE / TIME / RPM / WATT / CALORIES and PULSE (fig. 12).
(6) In case there is no activity for 3 seconds, the brightness level of the display decreases by 50%. You can press the "< " button to hide the function panel.
(7) When you press the QUICK START button, every calculating value will start counting. Press the UP or DOWN button during your work-out to increase or decrease the resistance level. Press the PAUSE button to pause your training. The values for SPEED & RPM & WATT return to 0, the other values will be kept (fig .12).
(8) Press the HOME button to return to the starting page.

NOTE:

• The console will switch to power saving mode, if it does not receive a signal for longer than 5 minutes.
• If the console is in power saving mode, press the QUICK START button to return to your work-out.
• If you are using the multimedia functions, please be aware that the console will not switch to power saving mode automatically. You will have to return to the main menu first.
• This console is a closed system. In case an app automatically jumps out of any update message, please DO NOT update.
• If the console recognizes an update, a WLAN connection is required.
• In case your WLAN connection is instable, it might happen that the current download will be interrupted. Please repeat the process to continue with the update.

4.6 Heart-rate measuring

Pulse measuring via hand sensors
The hand sensors integrated in the handles beside the seat allow you to determine your heart rate. You can measure your heart rate by lightly grasping the sensors with both hands at the same time. Blood pressure changes occur due to the heartbeat. The sensors measure the changes to the electric skin resistance caused by it. These values are then used to create an average and are displayed on the screen of the console as a heart rate.

Note:
For some people, the skin resistance change caused by the heart rate is so minimal that the measurements do not allow for usable values. Strong callus or sweat on the hands may also impair a correct measurement. In such cases, the heart rate will not be shown at all or only incorrectly.

If the measurement is incorrect or not taken at all, please check if it happens to only one person or to several people. If the pulse display only does not work in a single case, the equipment is not defective. In this case, we recommend using a chest strap to achieve a permanently correct heart rate display.

CAUTION: Your training equipment is not a medical device. Different factors may influence the accuracy of the heart rate display. The heart rate display only serves as a training aid.

Telemetric heart rate measuring
This ergometer is already equipped with a heart rate receiver as standard. Using a chest strap makes it possible for you to have a wireless heart rate measuring. This optimal and ECG-precise type of measuring reads the heart rate directly from the skin through a transmitting chest strap. The chest strap then sends the impulse to the receiver integrated in the console.

Positioning the chest strap and moistening the electrodes:
Place the belt directly below the chest, while the transmitter should be placed on the middle of the chest. The chest strap should sit comfortably, but not too loose. If the belt is too loose, the contact to the electrodes may be disrupted or the belt may slip while exercising. The transmitter turns on automatically once it is put on. In order to allow for a precise measuring, you should moisten the rubber electrodes. This is best done with a special chest strap contact gel, which is also used for ultrasound scans.

Note:
If you have not been active in doing sports for a longer period of time, you should first go to your physician in order to discuss your training with them. You should also contact your physician in advance in the event of heart problems, high/low blood pressure and obesity.

Training with heart rate orientation
Heart rate orientation guarantees an extremely effective and healthy training. Through your age and the following table, you can quickly and easily read and determine the optimal pulse for your training. An acoustic alarm will sound if your heart rate exceeds the set target heart rate. Which target heart rate is important for which training goal can be found out in the following.

Fat burning (weight management): The main goal here is to burn deposits of fat. In order to achieve this training goal, a low training intensity (approximately 55% of the maximum heart rate) and a longer training period are required.

Cardiovascular training (cardio training): The primary goal is to increase stamina and fitness through an improved provision of oxygen through the cardiovascular system. In order to achieve this training goal, medium intensity (approximately 75% of the maximum heart rate) with a medium training period is required.

Anaerobic (maximum) load training: The main goal of maximum load training is to improve recovery after short, intense loads in order to be able to quickly return to the aerobic zone. In order to achieve this training goal, a high intensity (approximately 90% of the maximum heart rate) with short, intense load is required, which is followed by a recovery phase in order to prevent muscle fatigue.

Example:
For a 45-year-old man or woman, the maximum heart rate is 175 (220 - 45 = 175).

- The fat burning target zone (55%) is at approximately 96 beats/min.
= (220 - age) x 0.55.
- The cardio target zone (75%) is at approximately 131 beats/min.
= (220 - age) x 0.75.
- The maximum heart rate for an anaerobic load training (90%) is at approximately 157 beats/min. = (220 - age) x 0.9.

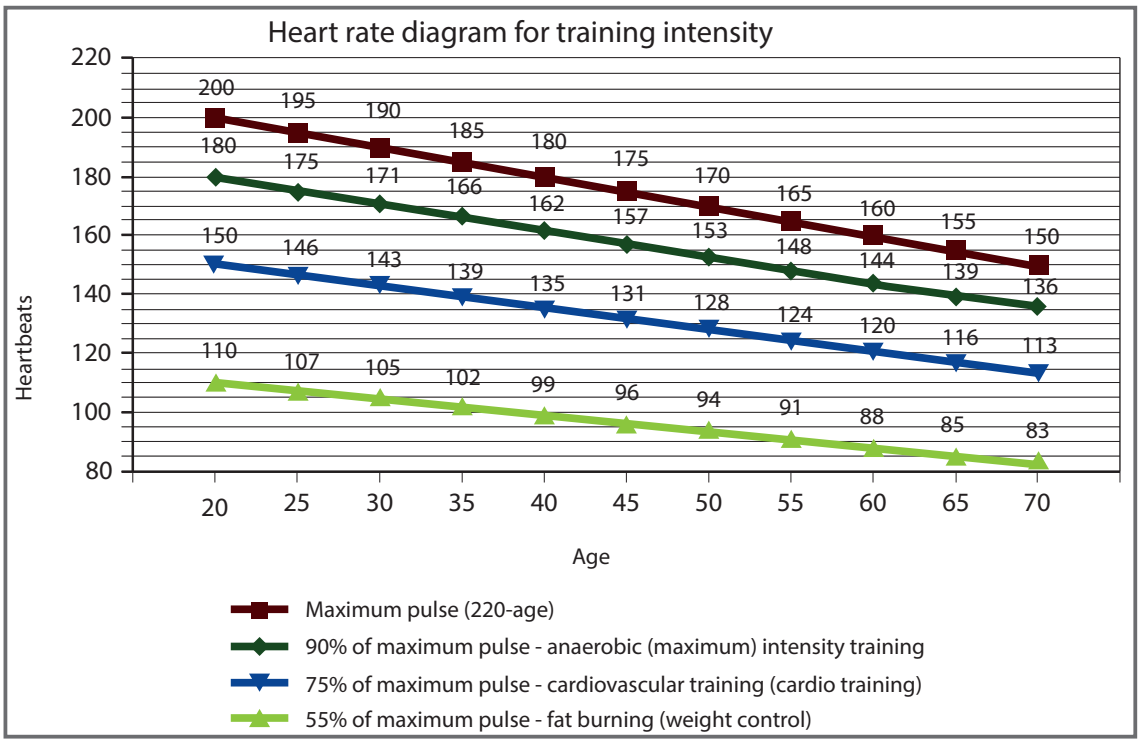

5 WARRANTY INFORMATION

cardiostrong's fitness equipment is subject to strict quality controls. However, if a fitness equipment purchased from us does not work perfectly, we take it very seriously and ask you to contact our customer service as indicated. We are happy to help you by phone via our service hotline.

Error descriptions
Your fitness equipment is developed for long-term, high-quality training. However, should a problem arise, please first read the operating instructions. For further assistance, please contact your contract partner or call our service hotline. To ensure your problem is solved as quickly as possible, please describe the defect as exactly as possible.

In addition to the statutory warranty, we provide a warranty for every fitness equipment purchased from us according to the following provisions.

Your statutory rights are not affected.

Warrantee
The warrantee is the first/original buyer and/or any person who received a newly purchased product as a gift from the original buyer.

Warranty periods
The following warranty periods begin on delivery of the fitness equipment.

Model	Usage	Full warranty	Frame
EX90 Plus Touch	Home use	24 months	30 years
	Semi professional use	12 months	

Repair costs
According to our choice, there will either be a repair, a replacement of individual damaged parts or a complete replacement. Spare parts, that have to be mounted while assembling the equipment, have to be replaced by the warrantee personally and are not a part of repair. After the expiration of the warranty period for repair costs, a pure parts warranty applies, which does not include the repair, installation and delivery costs.

The terms of use are defined as follows:

- Home use: solely for private use in private households up to 3 hours per day
- Semi-professional use: up to 6 hours per day (e. g. rehabilitation centers, hotels, clubs, company gyms)
- Professional use: more than 6 hours per day (e. g. commercial gyms)

Warranty service
Within the warranty period, equipment which develops faults as a result of material or manufacturing defects, will be repaired or replaced at our discretion. Ownership of equipment or parts of equipment which have been replaced is transferred to us. The warranty period is not extended nor does a new warranty period begin following repair or replacement under the warranty.

Warranty conditions
For the warranty to be valid, the following steps must be taken:
Please contact our customer service by email or phone. If the product under warranty has to be sent in for repair, the seller bears costs. After expiry of the warranty, the buyer bears the costs of transport and insurance. If the fault is covered by our warranty, you will receive a new or repaired equipment in return.

Warranty claims are invalid in case of damage resulting from:
- misuse or improper handling
- environmental influences (moisture, heat, electrical surge, dust, etc.)
- failure to follow the current safety measures for the equipment
- failure to follow the operating instructions
- use of force (e. g. hitting, kicking, falling)
- interventions which were not carried out by one of our authorized service centers
- unauthorized repair attempts

Proof of purchase and serial number
Please make sure that you are able to provide the appropriate receipt when claiming on your warranty. So that we can clearly identify the model of your equipment, and for the purposes of our quality control, you will need to give the serial number of your equipment, when contacting the service team. Where possible please have your serial number and your customer number ready when you call our service hotline. It will help us to deal with your request swiftly.

If you cannot find the serial number on your fitness equipment, our service team is at your disposal to offer further information.

Service outside of the warranty period
We are also happy to issue an individual cost estimate if there is a problem with your fitness equipment after the warranty has expired, or in cases which do not fall under the terms of the warranty, e. g. normal wear and tear. Please contact our customer service team to find a quick and cost-effective solution to your problem. In such a case you will be responsible for the delivery costs.

Communication
Many problems can be solved just by speaking to us as your contract partner. We know how important it is to you as a user of the fitness equipment to have problems solved quickly and simply, so you can enjoy working out with minimal interruption. For that reason, we also want to resolve your queries quickly and in a straightforward manner. Thus, please always keep your customer number and the serial number of the faulty equipment handy.

6 DISPOSAL

At the end of its operational life, this equipment cannot be disposed of in normal household waste. Instead, it must be disposed of via an electricals recycling centre. Further information can be obtained from your local authority's recycling service.

The materials can be recycled as per their symbols. Through the reuse, recycling of materials or other forms of recovery of old equipment, you make an important contribution to the protection of the environment.

7 RECOMMENDED ACCESSORIES

To make your training expercience even more efficient and pleasant, we recommend you to add suiting accessories to your training machine. This could be a **floor mat** that ensures that your product stands absolutely securely and protects your floor from sweat. Another example is the option of extended handrails that can be combined with some of our treadmills or **silicone spray** to keep moving parts in perfect condition.

In case you purchased a training machine that provides heart rate oriented training programmes, we highly recommend you to make use of a compatible chest strap. This ensures that your pulse is transmitted optimally. As for multi-gyms you might acquire a liking for **additional handles** or **weights**.

Our range of accessories offers you the highest quality and improves your training even more. If you would like to get information about compatible accessories, please visit our online store and look up the detailed page of your product. To do this, simply type in your training machine's article number in the search bar at the top of your screen. Now scroll down until you find the appropriate accessories. Alternatively you can contact our customer service either by telephone, e-mail or in person in one of our stores. We will be happy to advise you!

floor mat

chest strap

gym towels

8.1 Service hotline

So that we can give you the best possible service, please have your **model name, part number, serial number, exploded drawing and parts list** ready.

SERVICE-HOTLINE

DE

+49 4621 4210-0
+49 4621 4210-699
service@sport-tiedje.de
Mo. - Fr. 8:00 - 18:00
Sa. 9:00 - 18:00

DK

80 90 16 50
+49 4621 4210-945
info@t-fitness.dk
Ma. - Fr. 8:00 - 18:00
Lø. 9:00 - 18:00

FR

+33 (0) 172 770033
+49 4621 4210-933
service-france@sport-tiedje.fr
Lun. - Ven. 8:00 - 18:00
Sam. 9:00 - 18:00

NL

+31 172 619961
info@fitshop.nl
Ma. - Do. 9:00 - 17:00
Vr. 9:00 - 21:00
Za. 10:00 - 17:00

UK

+44 141 876 3972
orders@powerhousefitness.co.uk
Mon. - Fri. 9:00 - 17:00

INT

+49 4621 4210-0
service-int@sport-tiedje.de
Mon - Fri 8:00 - 18:00
Sat 9:00 - 18:00

8.2 Serial number and model name

Before assembling your equipment, find the serial number on the white sticker and enter it in the appropriate space.

Serial number:

Brand / category: cardiostrong ergometer

Model name: EX90 Plus Touch

8.3 Parts list

No.	Qty.	Description	No.	Qty.	Description
A	1	Main Frame	A29	2	Screw M8x10
A1	1	Sensor Wire 900Mm	A30	2	Transportation Wheel
A2	1	Controller Wire 500Mm	A31	2	Screw M12x53
A3	1	Konb	A32	1	Pressing Pipe
A4	4	Connection Slice 40 (4T)	A33	2	Washer Φ10xφ23x2t
A5	2	Incline Motor Sensor Wire	A34	2	Bearing 6200 (Mrb)
A8	1	Incline Motor Control Box	A35	1	Screw M10x30
A9	2	Screw M5x10	A36	1	Jshape Screw M6
A10	1	Adaptor	A37	1	Wire (Ac Power Switch To Power Cord)
A11	1	Dc Wire600mm	A38	1	Washer M6x Φ16xφ29.2x2t
A12	2	Socket	A39	1	Ground Wire
A13	1	Nut	A40	1	Power Cord
A14	4	Screw M3x8	A41	1	Flywheel Φ327
A15	1	Sensor Wire 100Mm	A42	2	Nut3/8"
A15-1	1	Sensor Wire Housing	A43	1	Tension Cable 400Mm
A15-2	1	Sensor Wire Housing Screw	A44	4	Screw M5x10
A16	12	Motor	A45	2	Turing Plate
A17	1	Wire (Overload Switch To Ac Power Switch)	A46	2	Crank
A18	2	Bearing 6005Zz (Tpx)	A47	1	Bearing Nut
A19	1	Brake Device (3T)	A47-1	1	Bush Φ25.2xφ29.2x54.5mm
A20	1	Screw M6x43	A47-2	1	Bush Φ25.2xφ29.2x5mm
A21	1	Screw M8x16	A48	4	Screw M8x25
A22	2	Washer M10	A49	1	Axle Φ25x160mm
A23	1	Overload Switch	A50	1	Magnetic Φ15x7
A24	1	Wire (Overload Switch To Ac Power Switch)	A51	1	Belt Wheel Φ360 (J10)
A25	1	Power Connection Wire	A52	1	Belt 530 (1355Mm)Xj8
A26	1	Switch Ac Power	A53	14	Nut M8
A27	1	Power Cord Socket	A54	1	Oscillating Axle Base (R)
A28	2	Screw M3x10	A55	1	Oscillating Axle Base (L)

No.	Qty.	Description	No.	Qty.	Description
A56	2	HANDLEBAR SUPPORTING COVER	A90	2	PUSH ROD BRACKET (FRONT)
A57	2	BEARING 6905 (TPX)	A91	1	END CAP
A58	2	END CAP Φ4“	A92	2	SPACER SHIM
A59	2	END CAP Φ4“	A93	2	PUSH ROD BRACKET (REAR)
A60	2	WASHER M6x2TxΦ19	A94	8	SCREW M8x20
A61	2	SCREW3/16“x5/8	A95	12	SCREW5/32“x3/4“(M4x19MM)
A62	2	FRONT CONNECTING SHAFT	A96	2	NUT M6
A63	1	END CAP	A97	2	SIDE DECORATION HOUSING SET (L)
A64	4	BUSH Φ12.1xΦ16x20	A98	2	SIDE DECORATION HOUSING SET(R)
A65	12	CLIP (36)	A99	2	FRONTSIDE DECORATION COVER
A66	2	BEARING 6004 (TPX)	A100	10	SCREW M4x20
A67	12	BEARING SLEEVEΦ42x3T	A101	4	END CAP
A68	2	SCREW M8x45	A102	1	SMALL CHAIN COVER (L)
A69	10	NUT M4	A103	1	MAIN CHAIN COVER (L)
A71	2	CRANK CONNECTING SHAFT	A104	1	UPPER DECORATION HOUSING
A72	2	BEARING 2203 (MRB)	A105	1	SMALL CHAIN COVER (R)
A73	2	NUT M10	A106	1	MAIN CHAIN COVER (R)
A74	2	CLIP (R40)	A107	8	SCREW M4x12
A75	8	BUSHΦ12.1xΦ16x10.5mm	A108	2	MOTOR SENSOR WIRE HOUSING
A76	4	SCREW M4x38mm	A109	2	MOTOR SENSOR WIRE HOUSING SCREW
A77	2	FLAT KEY 7x7x20MM	A110	2	END CAP
A78	12	BUSHΦ12.1xΦ16x14.75MM	A111	2	CRANK HOUSING
A80	2	FRONT PEDAL SUPPORTING TUBE	A112	2	SCREW
A81	2	WASHER M10xΦ27x2T	A113	4	SIDE DECORATION HOUSING SCREW
A82	2	SCREW M10x40MM	B1	1	PEDAL SUPPORTING TUBE (L)
A83	4	NUT	B2	1	PEDAL SUPPORTING TUBE (R)
A84	1	BRAKE	B3	16	BEARING SLEEVE
A85	1	SPRING	B4	22	BEARING 6201 (TPX)
A86	2	MOTOR PUSH ROD	B5	2	LOWER PEDAL SUPPORING TUBE
A87	4	AXLE FOR MOTOR PUSH ROD	B7	1	PEDAL BRACKET (L)
A88	4	NUT	B8	1	PEDAL BRACKET (R)
A89	8	NYLON SLEEVE	B8	1	Pedal(r)

No.	Qty.	Description	No.	Qty.	Description
B9	1	PEDAL REST (L)	C3	2	END CAP
B10	1	PEDAL REST (R)	C4	2	ADJUSTED NUT
B11	1	FRONT COVER PEDAL (L)	C5	2	ADJUSTED END Φ50
B12	1	CUSHION PAD (L)	D	1	CONSOLE SUPPORTING TUBE
B13	1	PEDAL (L)	D1	1	SENSOR WIRE 350mm
B14	6	SCREW 5/32"x5/8"(M4x15MM)	D2	1	SENSOR WIRE 200mm
B15	8	SCREW M6x10MM	D3	1	SENSOR WIRE 300mm
B16	1	PEDAL (R)	D4	2	HANDLE PULSE WIRE
B17	1	CUSHION PAD (R)	D5	2	HANDLE PULSE RING Φ31.8x0.9Tx19.5mm
B18	1	FRONT COVER PEDAL(R)	D6	2	SPACER RING Φ32x30.4
B19	2	UPPER CAP FOR PEDAL SUPPOR-TING 20x60	D7	4	HANDLE PULSE
B20	2	LOWER CAP FOR PEDAL SUPPOR-TING 20x60	D8	2	UPPER HANDLE PULSE HOUSING
B21	8	SCREW5/32"x1/2"	D9	2	LOWER HANDLE PULSE HOUSING
B22	2	MIDDLE PEDAL SUPPORTING ROD	D10	2	HANDLE PULSE RING Φ31.8x0.9Tx30.5mm
B23	4	NUT M8	D11	2	PLASTIC PIPE
B24	1	BUSH Φ8x(Φ12+Φ15)	D12	2	FOAM SPACER RING Φ32xΦ25.8x10mm
B25	4	BEARING 6001(TPX)	D13	2	SPONG HDR Φ23x3Tx150mm
B26	4	C-CLIP R28	D15	4	SCREW M3x8
B27	4	SCREW M8x40	D17	1	TOGGLE COVER L1
B30	2	SCREW M12x133	D18	1	TOGGLE COVER L2
B31	2	BUSH Φ15xΦ12.35x90mm	D19	1	PC BOARD LOAD -
B32	4	BEARING 6003zz	D20	1	TOGGLE LOAD -
B33	2	BUSH	D21	1	TOGGLE COVER R1
B34	2	PEDAL HOUSING (R)	D22	1	TOGGLE COVER R2
B35	2	PEDAL HOUSING (L)	D23	1	PC BOARD LOAD +
B36	4	SCREW	D24	1	TOGGLE LOAD +
B37	4	PEDAL REINFORCEMENT STRIP	D25	4	SCREW
B38	8	SCREW	J14	2	Pedal housing(l)
C1	1	SIDE CONNECTING TUBE (L)	E1	1	HANDLE BAR (L)
C2	1	SIDE CONNECTING TUBE (R)	E2	1	HANDLE BAR (R)

No.	Qty.	Description	No.	Qty.	Description
F1	1	CENTRAL SUPPORTING TUBE	J9	18	NUT M12
F2	1	IRON BRACKET	J10	4	SCREW M12x109
G	1	CONSOLE	J11	6	HANDLE BAR SCREW
G1	4	CONSOLE SCREW M5x10	J12	6	HANDLE BAR SCREW
G2	1	STRIDE LED SENSOR BOARD	J13	4	SCREW M8x16
H	1	WATER BOTTLE HOLDER	J14	2	WATER BOTTLE HOLDER SCREW
J1	4	SCREW M10x16	L1	1	SIDE TUBE COVER SET (L1)
J2	6	SCREW M4x16	L2	1	SIDE TUBE COVER SET (L2)
J3	2	SCREW M4×6	L3	1	SIDE TUBE COVER SET (L3)
J4	4	SCREW M8x55	L4	1	SIDE TUBE COVER SET (L4)
J5	4	WASHER M8x18	R1	1	SIDE TUBE COVER SET (R1)
J6	2	SCREW M8x20	R2	1	SIDE TUBE COVER SET (R2)
J7	6	SCREW M12x73	R3	1	SIDE TUBE COVER SET (R3)
J8	18	WASHER M12x20	R4	1	SIDE TUBE COVER SET (R4)

8.4 Exploded drawing

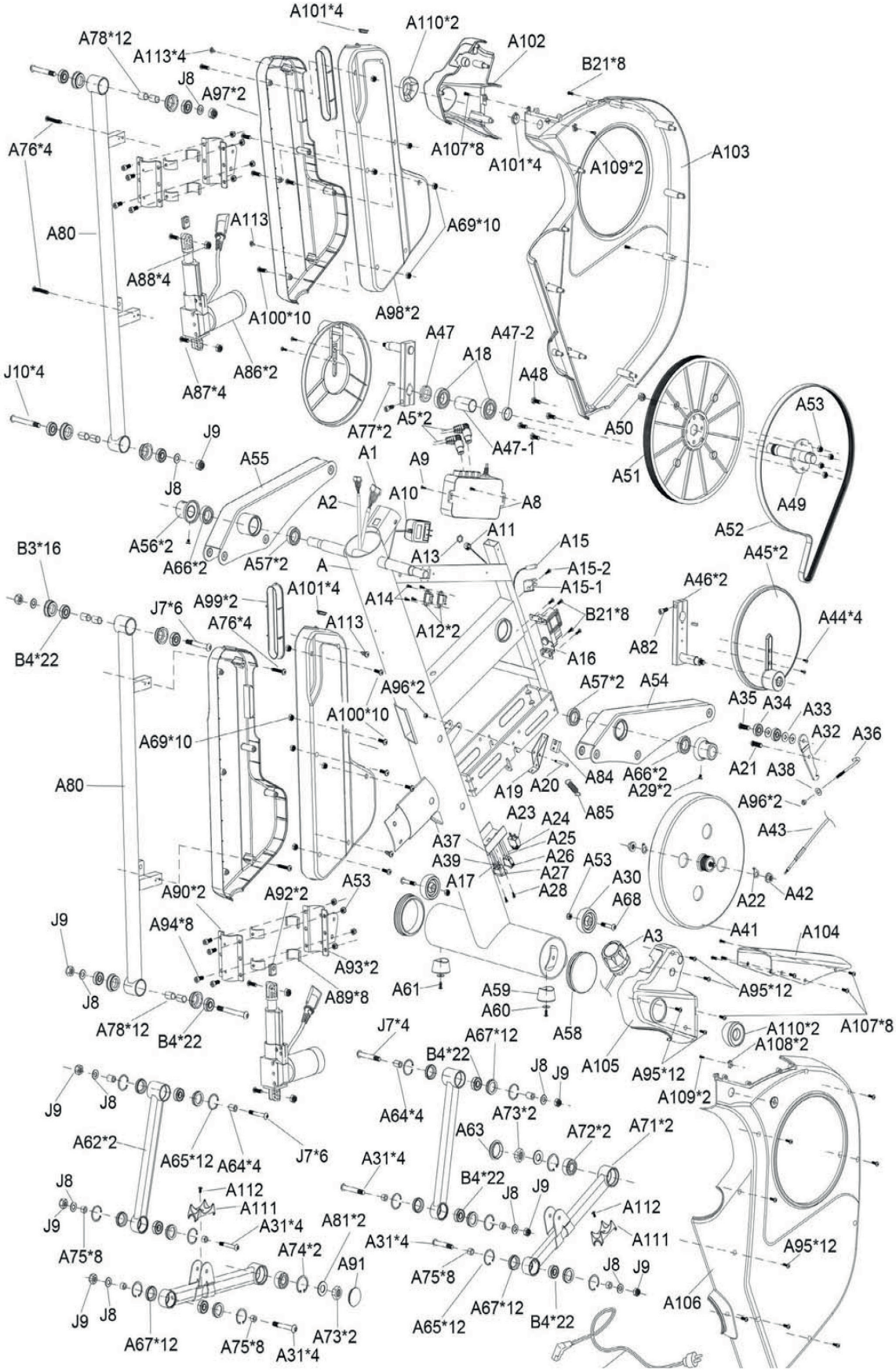

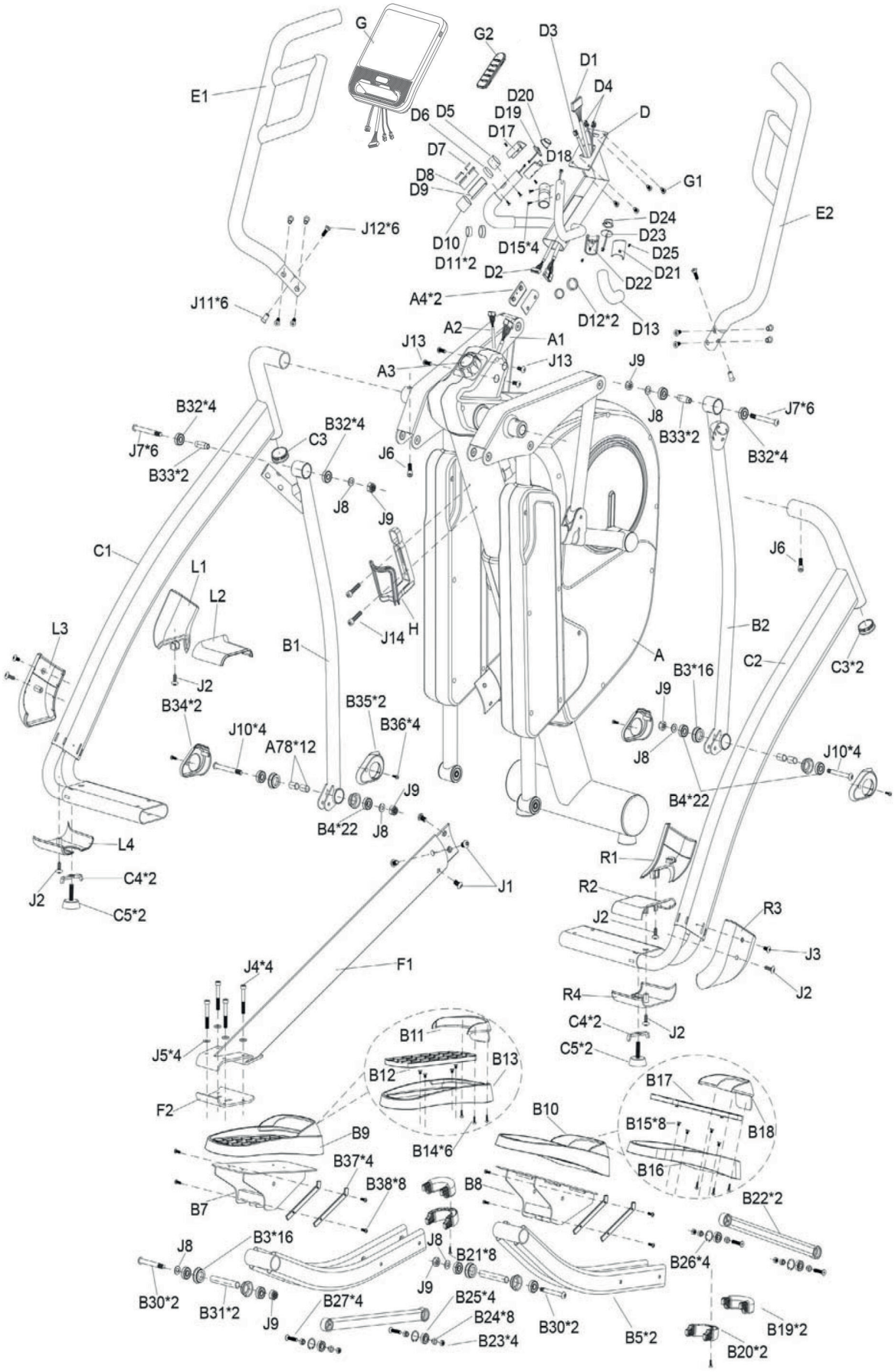
G
G2
D3
D1
D4
E1
D20
D19
D
D6
D5
D17
D7
D18
D8
D9
G1
E2
D24
J12*6
D23
D10
D15*4
D25
D11*2
D2
D21
D22
J11*6
A4*2
D12*2
D13
A2
A1
J13
J13
A3
J9
B32*4
J8
J7*6
B32*4
C3
J7*6
B33*2
J6
B33*2
B32*4
J8
J9
C1
J6
L1
L2
L3
B2
J14
H
B1
A
C2
C3*2
B3*16
J2
J9
B34*2
B35*2
J10*4
B36*4
A78*12
J8
J10*4
J9
B4*22
B4*22
J8
L4
R1
C4*2
J1
R2
J2
J2
C5*2
R3
J3
J4*4
F1
J2
R4
C4*2
J2
B11
C5*2
J5*4
B13
B12
B17
F2
B10
B15*8
B18
B9
B14*6
B16
B37*4
B38*8
B8
B7
B22*2
B3*16
J8
J8
B21*8
B26*4
J9
B30*2
B31*2
B27*4
B25*4
J9
B24*8
B30*2
B5*2
B19*2
B23*4
B20*2

CONTACT

Company head office
Sport-Tiedje GmbH
Flensburger Str. 55
24837 Schleswig

Hotline for Technical Information

DE	DK	FR
+49 4621 4210-0	80 90 16 50	+33 (0) 172 770033
+49 4621 4210-698	+49 4621 4210-945	+49 4621 4210-933
technik@sport-tiedje.de	info@t-fitness.dk	service-france@sport-tiedje.fr

NL	UK	INT
+31 172 619961	+44 141 876 3986	+49 4621 4210-0
info@fitshop.nl	support@powerhousefitness.co.uk	service-int@sport-tiedje.de

www.sport-tiedje.com
www.cardiostrong.de

DISCLAIMER

Product and manual are subject to change. Technical data can be changed without advance notice.

Please find a detailed overview including address and opening hours for all specialist fitness stores of the Sport-Tiedje Group in Germany and abroad on the following website.

www.sport-tiedje.com/en/stores

Note

Note

cardiostrong®