cardiostrong®

# Assembly and Operating Instructions

max. 150 kg

~ 90 Min.

131 kg

L 145 | W 88 | H 165

CSTEX90PLUST.01.06

Art. No. CST-EX90-PLUS-T

## Crosstrainer EX90 Touch

# Content


1 GENERAL INFORMATION 7

1.1 Technical Data 7
1.2 Personal Safety 8
1.3 Electrical Safety 9
1.4 Set-Up Place 10

2 ASSEMBLY 11

2.1 General Instructions 11
2.2 Scope of Delivery 12
2.3 Assembly 14

3 OPERATING INSTRUCTIONS 23

3.1 Console Display 23
3.2 Button Functions 24
3.3 Switching On and Initial Settings 24
3.4 Programmes 26
3.4.1 Quick-Start Programme 26
3.4.2 Manual Programme 27
3.4.3 Pre-Set Programmes 27
3.4.4 Watt Programme 28
3.4.5 Heart Rate Controlled Programmes 28
3.5 Recovery Function 29
3.6 Training Record 30
3.7 Multimedia and Software Updates 31
3.7.1 Retrieving Apps from the Main Menu 32
3.7.2 Access to Apps During Your Workout 32

4 STORAGE AND TRANSPORT 33

4.1 General Instructions 33
4.2 Transportation Wheels 33

5 TROUBLESHOOTING, CARE AND MAINTENANCE 34

5.1 General Instructions 34
5.2 Faults and Fault Diagnosis 34
5.3 Maintenance and Inspection Calendar 35

6 DISPOSAL 35

7 RECOMMENDED ACCESSORIES 36

8 ORDERING SPARE PARTS 37
8.1 Serial Number and Model Name 37
8.2 Parts List 38
8.3 Exploded Drawing 42
9 WARRANTY 44
10 CONTACT 46

**Dear customer,**

thank you for choosing fitness equipment from cardiostrong®. cardiostrong offers high-quality home fitness equipment that is optimally adapted to the conditions at home. Train at home no matter what the weather or time of the day. cardiostrong fitness equipment offers training programmes and a variety of equipment for all training levels and all training goals. Further information can be found at www.sport-tiedje.com or www.cardiostrong.de. We hope you enjoy your training!

**Intended Use**

The equipment may only be used for its intended purpose.

The equipment is suitable for home use and semi-professional use (e.g. hospitals, clubs, hotels, schools, etc.). The equipment is not suitable for commercial or professional use (e.g. fitness studio).

► **ATTENTION**
The console of this fitness device uses software that is perfectly adapted to the equipment. Please do not make any unauthorised modifications, such as the installation of external apps. This can affect the functionality of the console or even make it unusable. Only install the necessary updates in the Software Updater.

**Legal Notice**

Sport-Tiedje GmbH
Europe's No. 1 for home fitness

International Headquarters
Flensburger Straße 55
24837 Schleswig
Germany

Management:
Christian Grau
Sebastian Campmann
Dr. Bernhard Schenkel

No. HRB 1000 SL
Local Court Flensburg
European VAT Number: DE813211547

**Disclaimer**

©2010 cardiostrong® is a registered brand of the company SportTiedje GmbH. All rights reserved. Any use of this trademark without the explicit written permission of Sport-Tiedje is prohibited.

Product and manual are subject to change. Technical data can be changed without advance notice.

## ABOUT THIS MANUAL

Please carefully read the entire manual before installation and first use. The manual will help you to quickly set up the system and explains how to safely use it. Make sure that all persons exercising with the equipment (especially children and persons with physical, sensory, mental or motor disabilities) are informed about this manual and its contents in advance. In case of doubt, responsible persons must supervise the use of the equipment.

Due to ongoing changes and software optimisations, the manual may have to be updated. If you notice any discrepancies during assembly or use, please refer to the manual uploaded to the webshop. The latest manual is always available there.

This equipment has been manufactured according to the latest safety knowledge. As far as possible, potential safety hazards which could cause injury have been eliminated. Make sure to carefully follow the instructions and that all parts are securely in place. If required, read through the instructions again to correct any mistakes.

Please pay close attention to the safety and maintenance instructions given here. The contract partner cannot be held liable for damage to health, accidents or damage to the equipment when it is not used in accordance with these instructions.

The following safety instructions may appear in this manual:

► **ATTENTION**
This notice indicates potentially hazardous situations which, if not avoided, may result in property damage.

⚠ **CAUTION**
This notice indicates potentially hazardous situations which, if not avoided, may result in slight or minor injuries!

⚠ **WARNING**
This notice indicates potentially hazardous situations which, if not avoided, may result in death or serious injuries!

⚠ **DANGER**
This notice indicates potentially hazardous situations which, if not avoided, will result in death or serious injuries!

ⓘ **NOTICE**
This notice indicates further useful information.

Retain these instructions in a safe place for future reference, maintenance or when ordering replacement parts.

## 1.1 Technical Data

**Check your TFT console regularly for possible software updates.
If available, make sure to carry out the updates.**

**TFT display of**

+ speed in km/h
+ training time in min
+ training distance in km
+ cadence (rotations per minute)
+ calories burnt in kcal
+ heart rate (when using the hand sensors or a chest strap)
+ Watt
+ resistance level

| | |
|---|---|
| Resistance system: | electronic magnetic brake system |
| Resistance level: | 16 |
| Min. and max. wattage at 60 RPM: | 59-258 Watt |
| Min. and max. wattage at 100 RPM: | 135 - 562 Watt |
| Adjustable range in the Watt programme: | 30-400 Watt (adjustable in 5-Watt increments) |
| User memory: | 4 |
| Quick Start programmes: | 1 |
| Manual programmes: | 3 |
| Pre-set programmes: | 60 |
| Watt-controlled programmes: | 1 |
| Heart rate controlled programmes: | 4 |
| Balance mass: | 12 kg |
| Step width: | 11 cm |

Electronic step length adjustment:
45 cm (18“), 50 cm (20“), 55 cm (22“), 60 cm (24“), 65 cm (26“)

**Weight and dimensions:**

| | |
|---|---|
| Article weight (gross, including packaging): | 144 kg |
| Article weight (net, without packaging): | 131 kg |
| Packaging dimensions (L x W x H) approx.: | 140 cm x 115 cm x 49 cm |
| Set-up dimensions (L x W x H) approx.: | 145 cm x 88 cm x 165 cm |
| Maximum user weight: | 150 kg/330 lbs |

## 1.2 Personal Safety

**DANGER**

+ Before you start using the equipment, you should consult your physician that this type of exercise is suitable for you from a health perspective. Particularly affected are persons who: have a hereditary disposition to high blood pressure or heart disease, are over the age of 45, smoke, have high cholesterol values, are overweight and/or have not exercised regularly in the past year. If you are under medical treatment that affects your heart rate, medical advice is absolutely essential.
+ Note that excessive training can seriously endanger your health. Please also note that heart rate monitoring systems can be inaccurate. If you notice any signs of weakness, nausea, dizziness, pain, shortness of breath, or other abnormal symptoms, stop exercising immediately and seek advice from your doctor if necessary.

**WARNING**

+ This equipment may not be used by children under the age of 14.
+ Children should not be allowed unsupervised access to the equipment.
+ Persons with disabilities must have a medical license and must be under strict observation when using the equipment.
+ Remember that your device does not have a freewheel function. Therefore moving parts cannot be stopped immediately.
+ Note that the individual physical power required to perform an exercise may differ from the displayed mechanical power.
+ When ascending and descending, make sure that one of the treads is in the lowest position.
+ The equipment is strictly for use by one person at a time.
+ Keep your hands, feet and other body parts, hair, clothing, jewellery and other objects well clear of moving parts.
+ During use, wear suitable sports clothing rather than loose or baggy clothing. When wearing sports shoes, make sure they have suitable soles, preferably made of rubber or other non-slip materials. Shoes with heels, leather soles, studs or spikes are unsuitable. Never exercise barefoot.

**CAUTION**

+ If your equipment needs to be connected to the power supply with a mains cable, make sure that the cable is not a potential tripping hazard.
+ Make sure that nobody is within the range of motion of the equipment during training so as not to endanger you or other persons.

**ATTENTION**

+ Do not insert any objects of any kind into the openings of the device.

## 1.3 Electrical Safety

**DANGER**

+ In order to reduce the risk of an electric shock, always unplug the equipment from the mains socket immediately after your workout, before assembly or dismantling, and before maintenance or cleaning. Do not pull on the cable.

**WARNING**

+ Do not leave the equipment unattended while the mains cable is plugged into the mains socket. During your absence, the mains cable must be removed from the mains socket to prevent improper use by third parties or children.
+ If the mains cable or plug is damaged or defective, contact your contract partner. Until repair, the equipment must not be used.

**ATTENTION**

+ The equipment requires a mains connection of 220-230 V with 50 Hz mains voltage.
+ The equipment may only be connected directly to an earthed socket using the supplied mains cable. Extension cables must conform to VDE guidelines. Always completely unwind the mains cable.
+ The socket must be protected by a fuse with a minimum fuse rating of "16 A, slow blow".
+ Do not make any changes to the mains cable or the mains plug.
+ Keep the mains cable away from water, heat, oil and sharp edges. Do not route the mains cable underneath the equipment or under a carpet or rug, and do not place any objects on top of it.
+ If your purchased item is equipped with a TFT console, software updates must be carried out regularly. Follow the instructions on the console to perform the update(s).
+ The software systems on gym equipment with TFT consoles are set up only for the pre-installed apps. Do not install any additional apps.

**NOTICE**

+ The pre-installed apps on TFT consoles are produced and provided by external manufacturers. Sport-Tiedje does not take any responsibility for the availability, functionality or contents of these apps.

## 1.4 Set-Up Place

⚠ **WARNING**

+ Do not place the equipment in main corridors or escape routes.

⚠ **CAUTION**

+ Choose a location in which to place the equipment such that there is enough free space/ clearance to the front, the rear and to the sides of the equipment. Make sure that you leave at least 30 cm on each side of the equipment and at least 15 cm in front of and behind the equipment as a training zone. This is the minimum required area in order to safely use the equipment. The recommended free zone around the equipment should be at least 60 cm on each side and 45 cm in front of and behind the equipment.
+ The training room should be well ventilated during training and not be exposed to any draughts.
+ Choose the place in which to set up the equipment such that there is enough free space/ clearance to the front, the rear and to the sides of the equipment.
+ The set-up and mounting surface of the equipment should be flat, loadable and solid.

► **ATTENTION**

+ The device may only be used in one building, in sufficiently tempered and dry rooms (ambient temperatures between 10°C and 35°C). The equipment should not be used outdoors or in rooms with high humidity (over 70%) like swimming pools.
+ A floor protective mat/equipment underlay can help to protect high-quality floor coverings (parquet, laminate, cork, carpets) from dents and sweat and can help to level out slight unevenness.

# 2 ASSEMBLY

## 2.1 General Instructions

**DANGER**

+ Do not leave any tools, packaging materials such as foils or small parts lying around, as otherwise there is a danger of suffocation for children. Keep children away from the equipment during assembly.

**WARNING**

+ Pay attention to the instructions attached to the equipment in order to reduce the risk of injuries.

**CAUTION**

+ Do not open the packaging when it is lying on its side.
+ Ensure to have sufficient room for movement in each direction during assembly.
+ The assembly of the equipment must be carried out by at least two adults. If in doubt, seek the help of a third technically skilled person.

**ATTENTION**

+ To prevent damage to the equipment and the floor, assemble the equipment on a mat or packaging board.

**NOTICE**

+ In order to make the assembly as simple as possible, some screws and nuts to be used can already be pre-assembled.
+ Ideally, assemble the equipment at its later set-up place.

## 2.2 Scope of Delivery

The scope of delivery consist of the following parts. At the beginning, check whether all parts and tools belonging to the device are included in the scope of delivery and whether damage has occurred. In the event of complaints, the contractual partner must be contacted directly.

⚠ **CAUTION**
If parts of the scope of delivery are missing or damaged, the assembly must not be carried out.

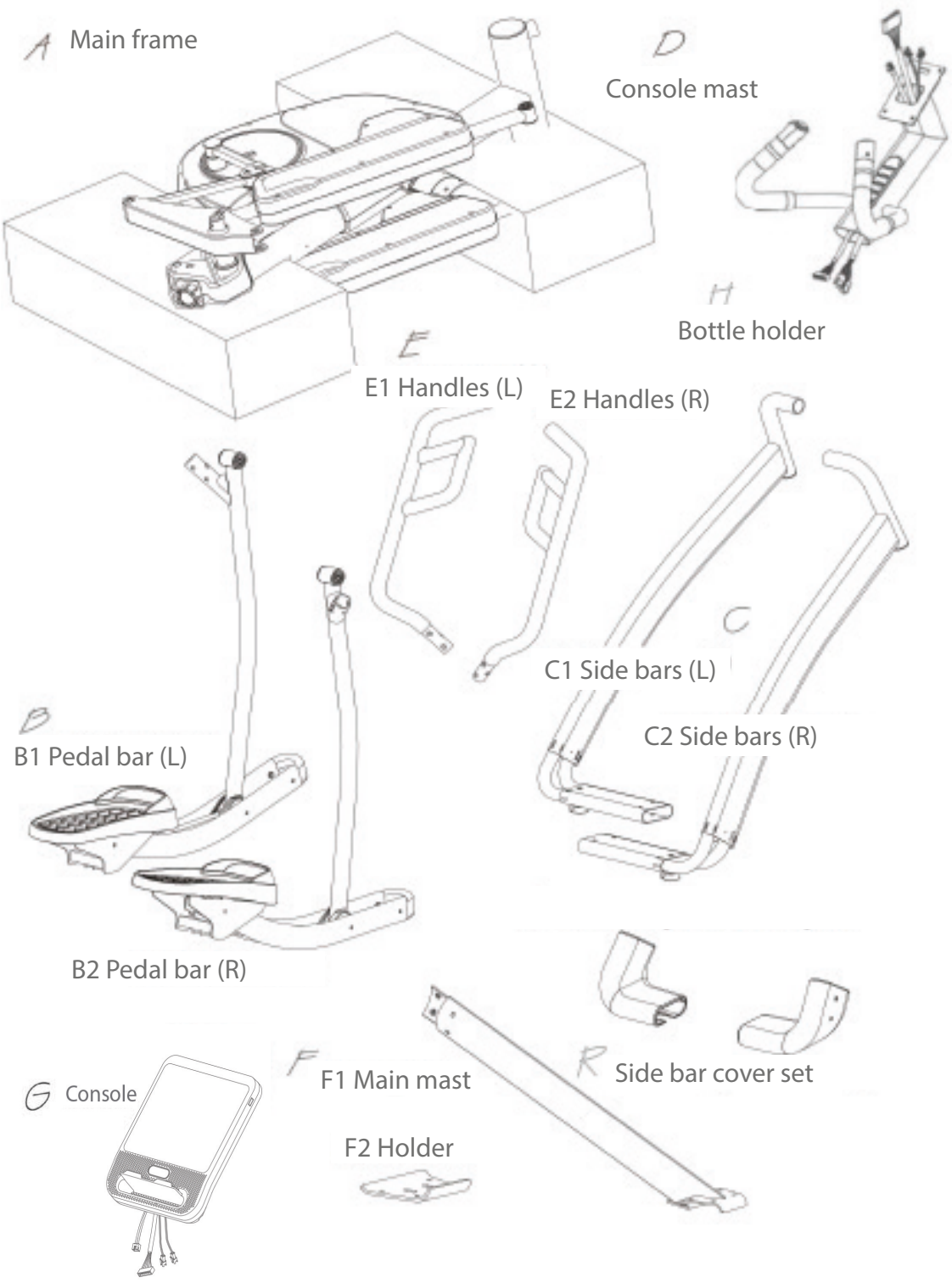

(J2) Screws M4x16

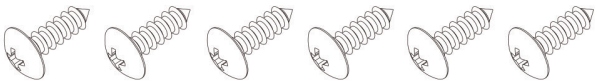

(J3) Screws M4x6

(J4) Screws M8x55

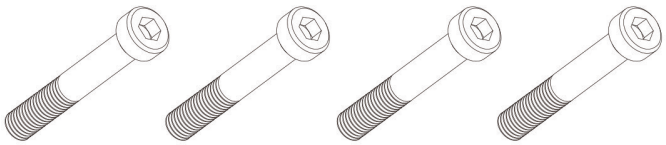

(J5) Washers M8

(J6) Screws M8x20

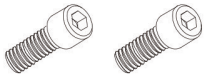

(J7) Screws M12x73

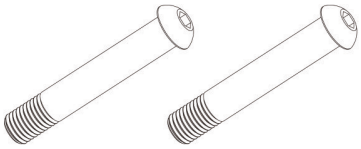

(J8) Washers M12

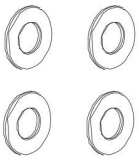

(J9) Nuts M12

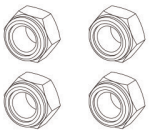

(J10) Screws M12x109

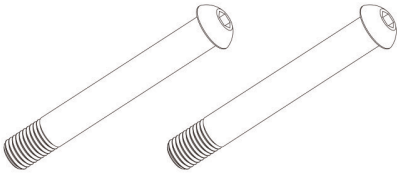

(J13) Screws M8x16

(J14) Screws M5

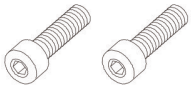

4m/m

5m/m

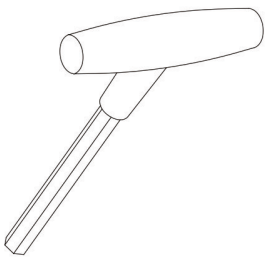

6m/m*2

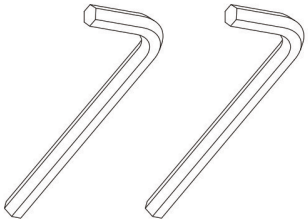

#19

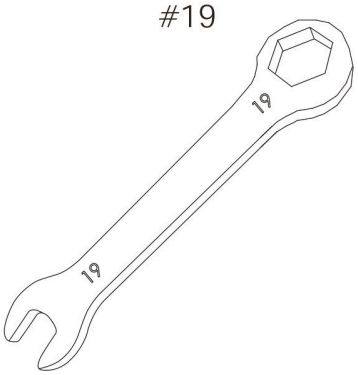

## 2.3 Assembly

Before assembly, take a close look at the individual assembly steps shown and carry out the assembly in the order given.

ⓘ **NOTICE**
First loosely screw all parts together and check that they fit properly. Tighten the screws using the tool only when you are instructed to do so.

### Step 1: Unpacking

1. Remove the upper foam parts (1) and (2) and leave the main frame (A) and lower foam parts (3) and (4) in the box.
2. Take out the console, console supporting tube, console mast, pedal supporting bars and hardware bag.

⚠ **CAUTION**
For safety reasons, the pedal bars are just to be released with the respective control knob once you are asked to do so at the end of the instructions.

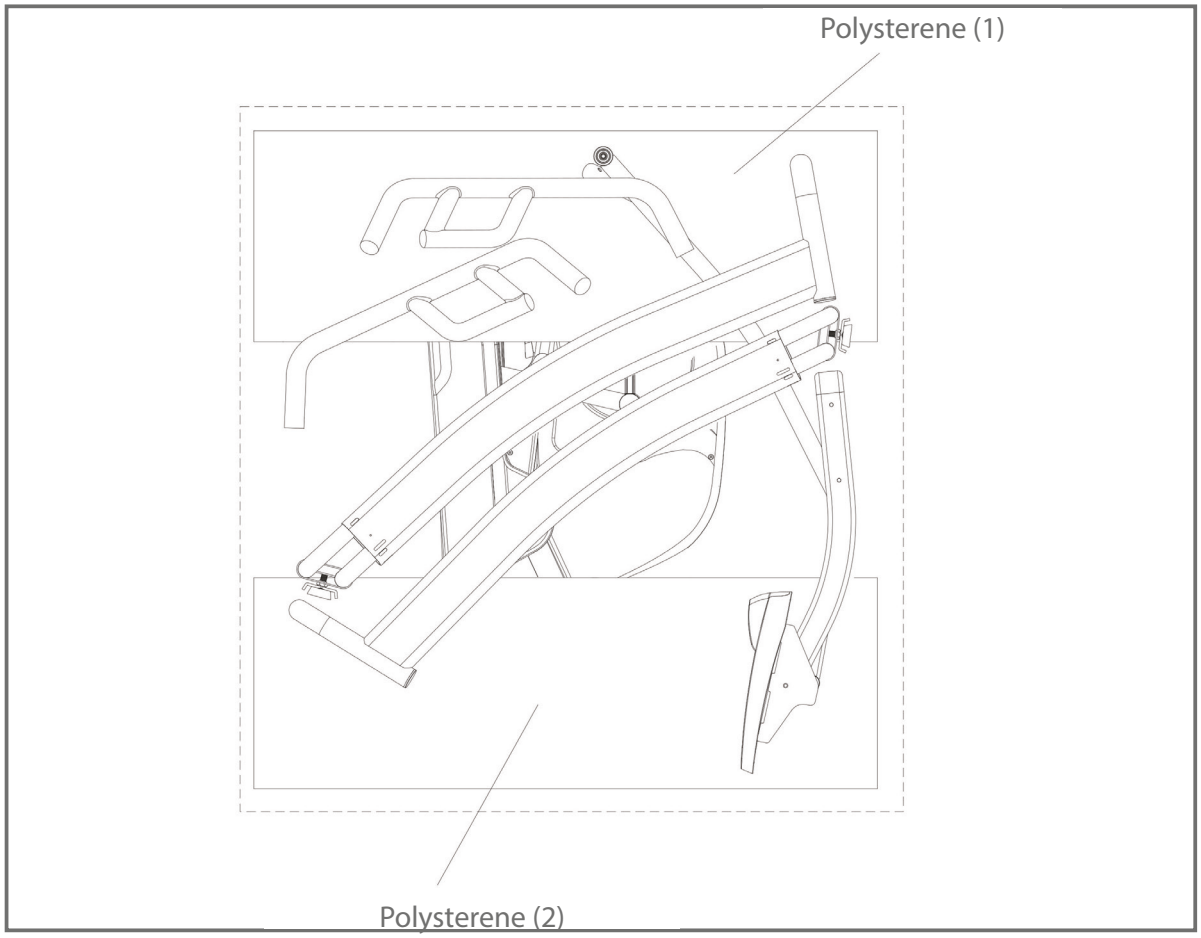

## **Step 2:** Assembly of the main mast (F1)

1. Loosen two screws (F5) from the main frame (A) and two screws from the main mast (F1).
2. Connect the main mast (F1) with the main frame (A) with the previously loosened four screws (J1).
3. Tighten the screws.

ⓘ **NOTICE**
Before you continue with step 3 of the assembly, make sure that the four screws (J1) are tightened.

Tool: 6mm Allen key

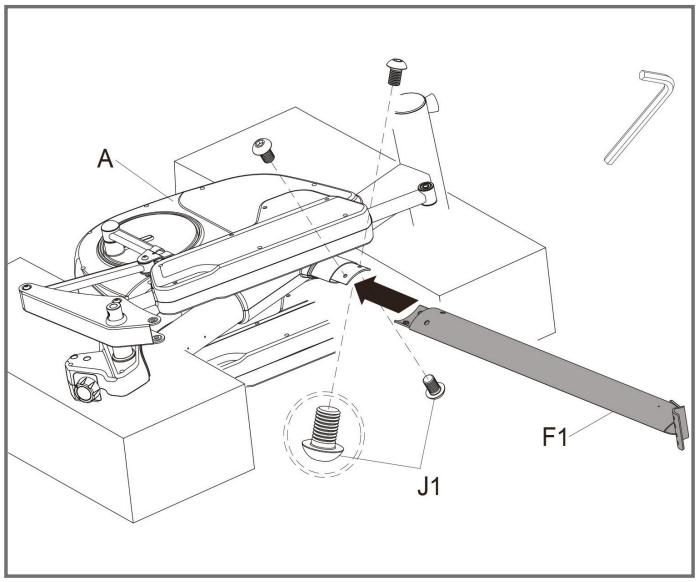


## **Step 3:** Assembly of the side bar cover sets (L+R)

1. Mount the right side bar cover (R1) with a screw (J2) on to the cover (R1).
2. Follow steps 2.1 to 2.4 in order to tighten the side bar cover sets.

2.1. Connect the covers (R1 & R2) on the right connection bar (C2).

2.2. Connect the cover (R3) to the bar (C2).

2.3. Connect the cover (R4) to the bar (C2).

2.4. Secure the covers with the screw (J3) first and then with two screws (J2) as illustrated.

3. Repeat the same steps as described before in order to assemble the left side bar cover set.
4. Tighten the screws.

Tool: 4mm (Phillips screwdriver)

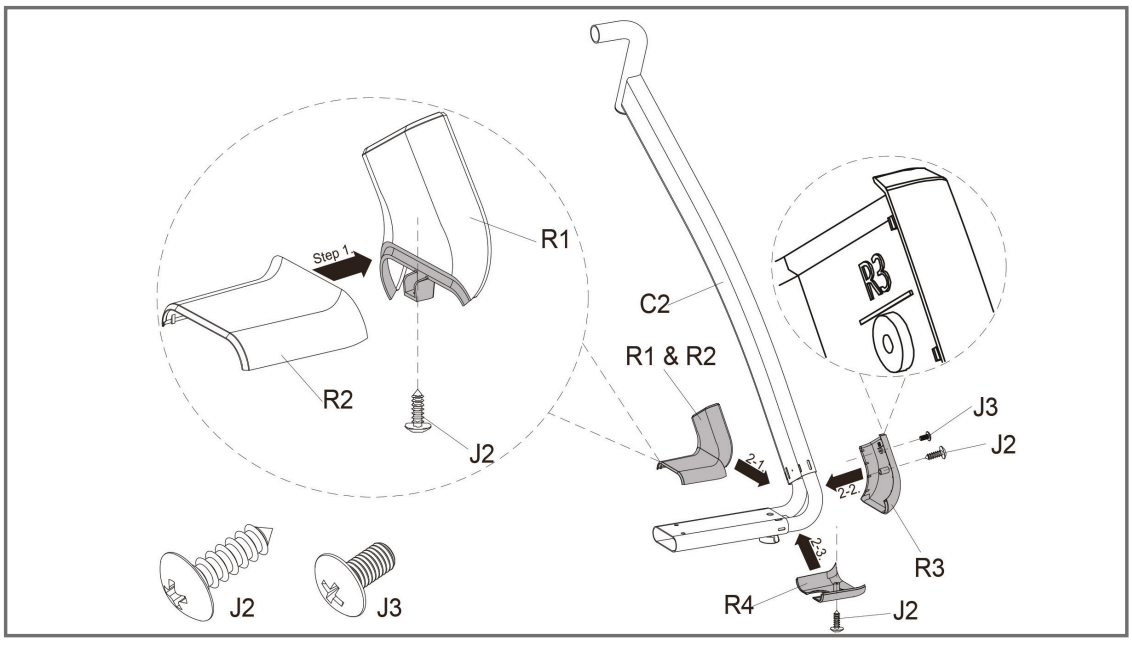

**Step 4: Assembly of the right side bar (C2)**

1. Mount the right side bar (C2) on the main frame (A) with a screw (J8) on top (figure A) and two screws (J5) including washers (J5) with the bracket (F2) on the bottom (figure B).

► **ATTENTION**
Do not tighten the screws (J6 and J4) completely yet.

2. Raise the main frame (A) with two people and remove the foam (see figure on the right).

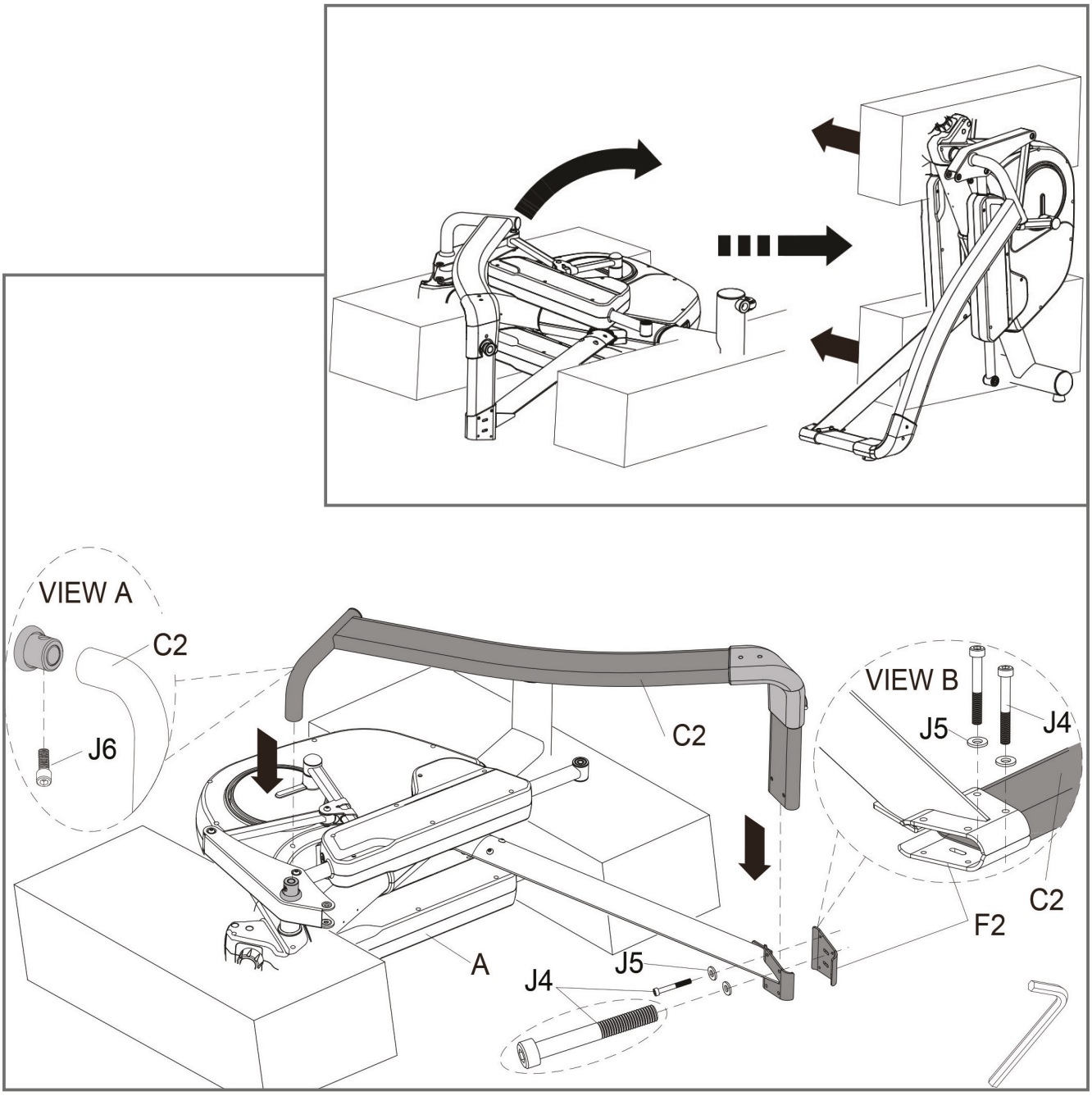

## **Step 5:** Assembly of the left side bar (C1) and covers

1. Connect the left side bar (C1) on the main frame (A) with a screw (J6) on top and two screws (J2) and the bracket (F2) on the bottom.
2. Now you can tighten all of the screws from the previous steps (J6, J4).

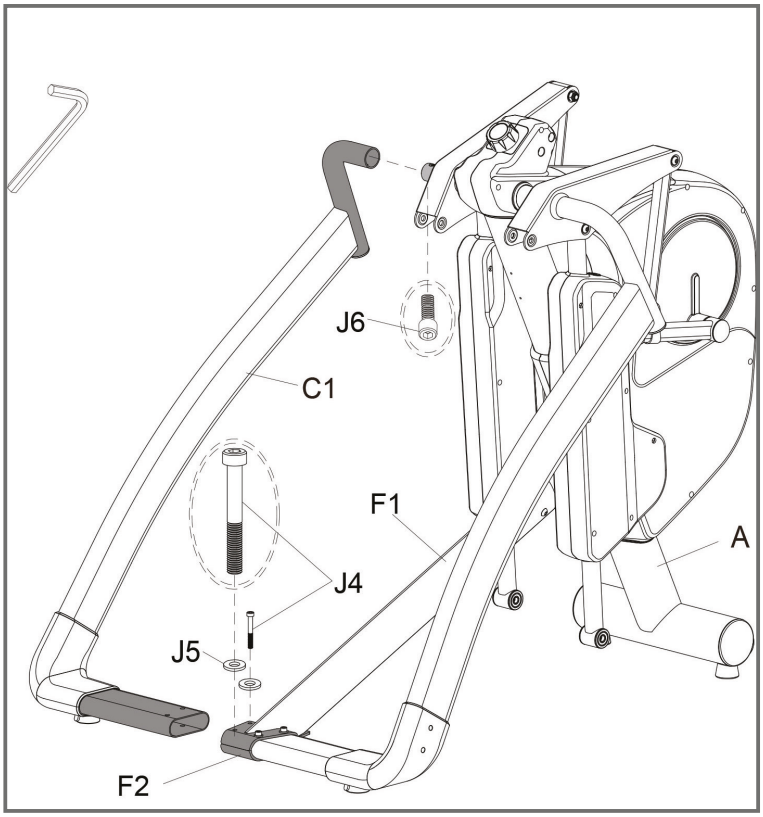


## **Step 6:** Assembly of the pedal bars

1. Connect the right pedal bar (B2) on the top with the main frame (A) and mount it with the nuts (J9), washers (J8) and screws (J3) as in figure C.
2. Mount the pedal bar on the bottom of the main frame with a bolt (J5), a washer (J8) and a nut (J9) as in figure D.
3. Tighten the bolts (J5) and the nuts (J9); see figure E.
4. Repeat the process for the left pedal bar (B1).

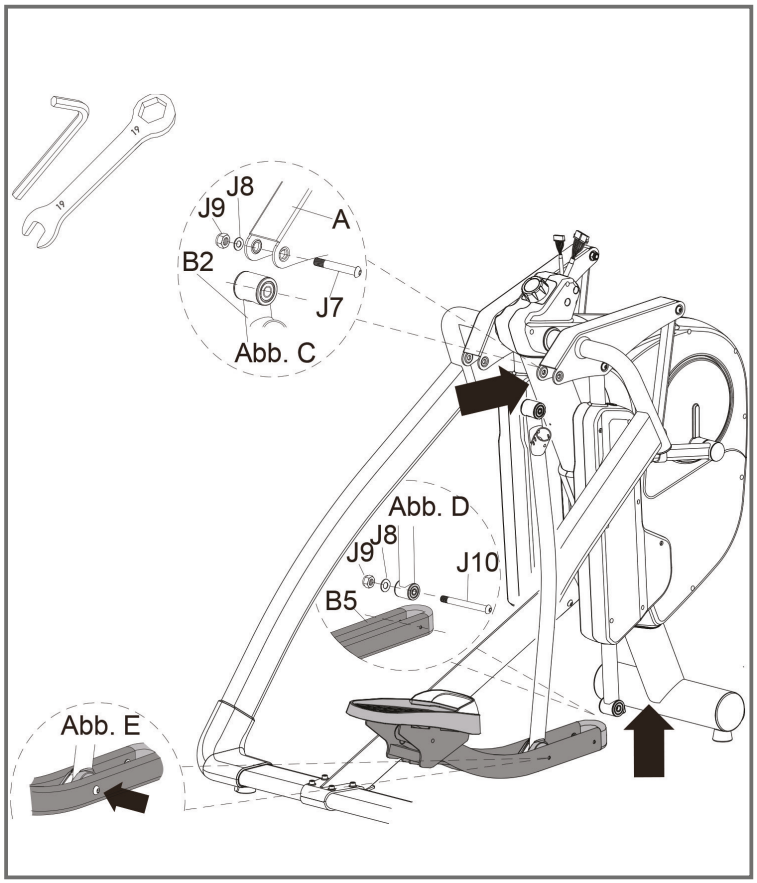

### **Step 7:** Assembly of the handles

1. Loosen the six pre-mounted screws (J12 and J11) from the left handle (E1).
2. Connect the left handle (E1) with the main frame (A) by tightening all screws (J12 and J11) with two 6mm Allen keys; see figure F.
3. Repeat the process for the right handle (E2).

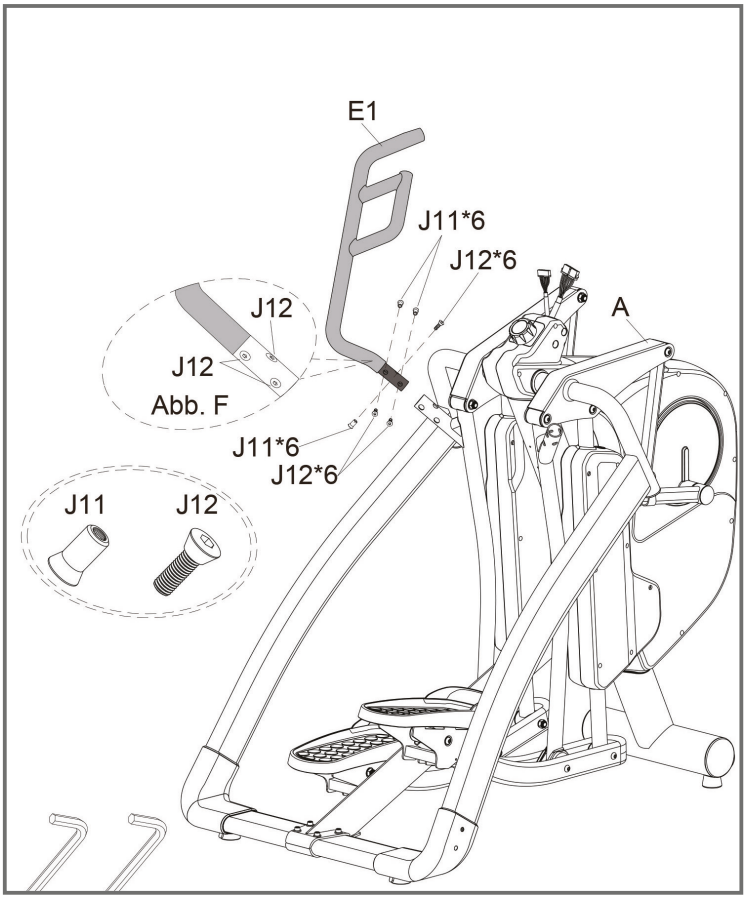


### **Step 8:** Assembly of the console mast and the bottle holder

1. Connect the cable (D1 and D2) from the console mast (D) with the cables (A1 and A2) from the main frame (A).

► **ATTENTION**
Pay attention to not pinch the cables.

2. Mount the console mast (D) on the main frame (A) with two screws (J3) and two pre-mounted screws (J13); see figure G.
3. Mount the bottle holder (H) on the main frame (A) with two screws (J14).
4. Tighten the screws.

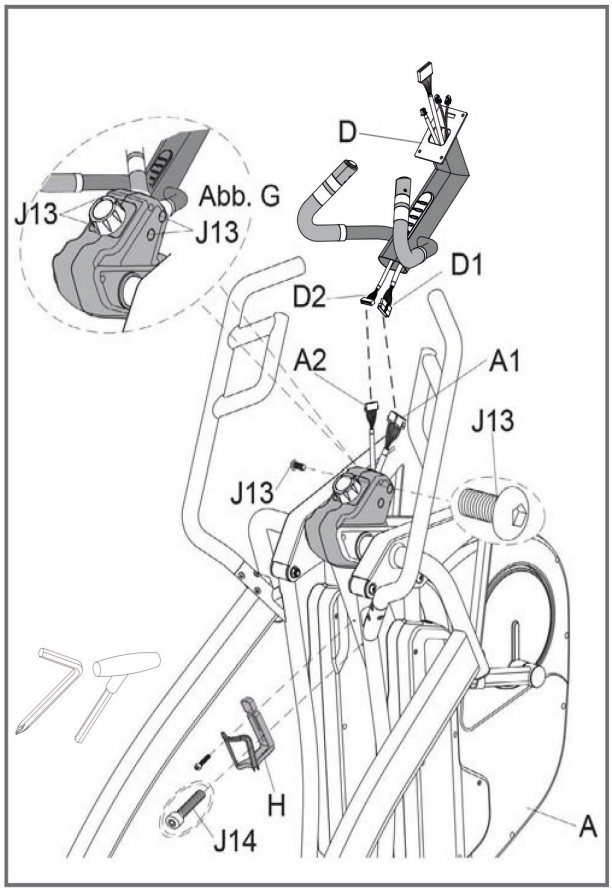

## **Step 9:** Assembly of the console

1. Loosen the four pre-mounted screws (G1) from the console (G).
2. Connect the console cables (D1, D2, D14 & D16) and the heart rate cable (D4) from the console mast with the console.

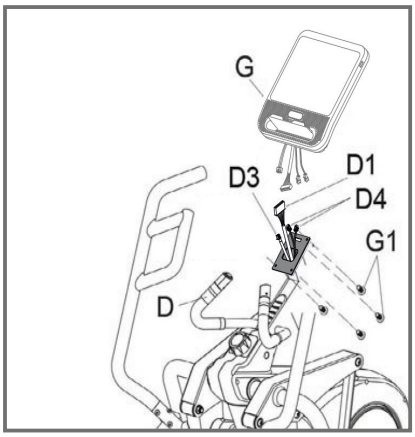


ⓘ **NOTICE**
Make sure that the cables are properly connected with each other. Slide the excess cable into the casing and the console mast (D).

► **ATTENTION**
Pay attention to not pinch the cables.

3. Mount the console (G) on the console mast (D) with the four screws (G1).
4. Tighten the screws.

## **Step 10:** Locking the pedal bars (B1 and B2)

⚠ **CAUTION**
+ The pedal bars should always be locked if the equipment is not being used.
+ Never lock the pedal bars if the equipment is still moving, but rather only when the equipment has come to a complete standstill.

To do this, turn the knob (A3) to the "LOCK" position in order to lock the pedal bars (B1 and B2) and avoid possible injuries.

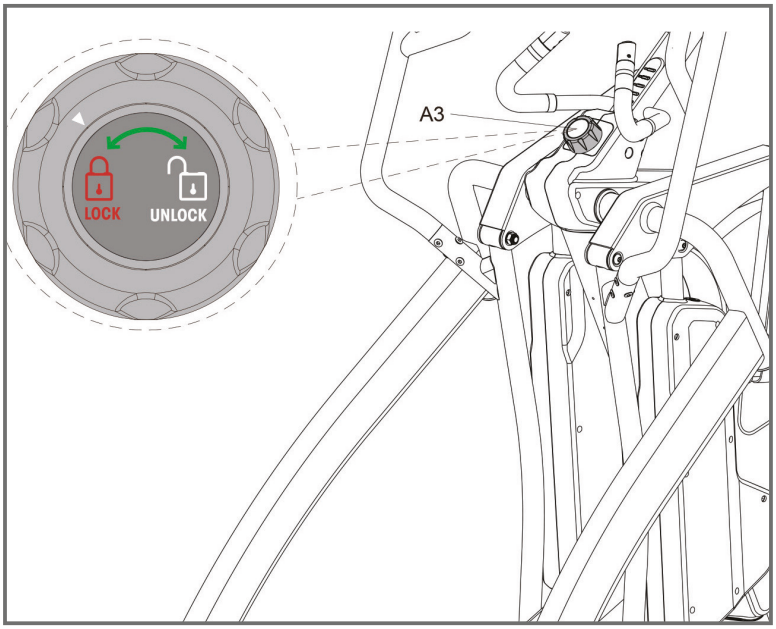

**Step 11: Function buttons to adjust the stride length:**

1. There is a button on the left and right small handles of the console mast. The left button has the following function: The fine, infinitely variable reduction of the current stride length. The right button has the following function: The fine, infinitely variable increase of the current stride length.
2. If the stride length is reduced, the DOWN signal on the function button will light up in green. If the stride length is increased, the UP signal on the function button will light up in red.

**NOTICE**

The button for adjustments will not react as long as the stride length is being changed through the button and the LED light is blinking. The button only works if the LED light is illuminated. If there are disruptions while training, simply press any stride length adjustment button and the training can be continued.

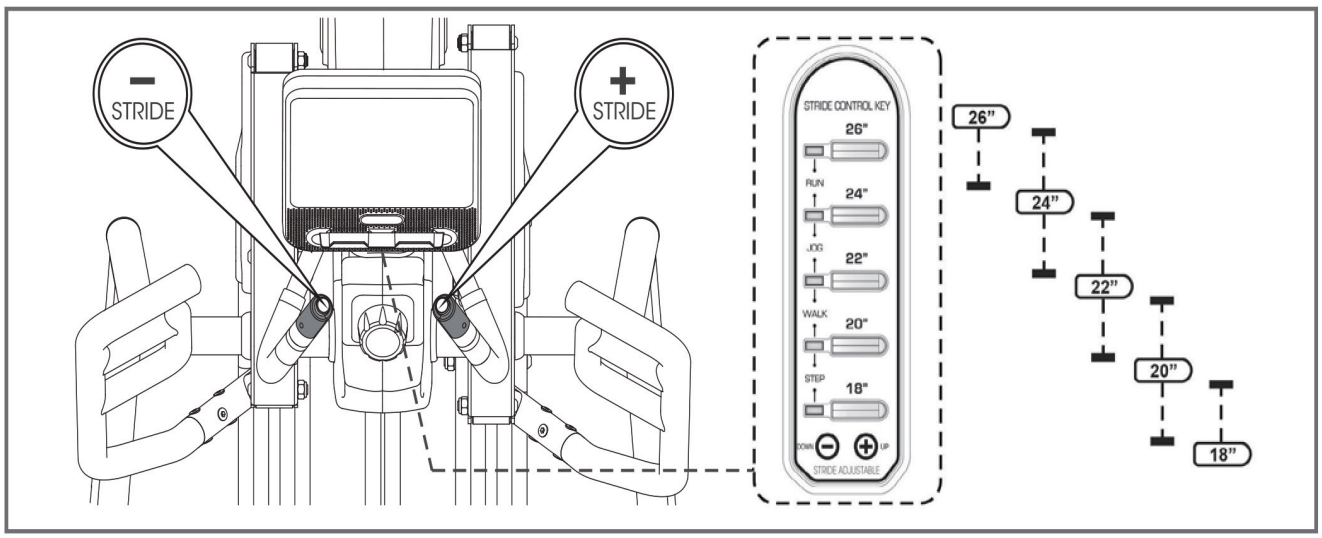

### **Step 12:** Setting the stride length via the incline motor

Corresponding to personal requirements, the stride length, as shown on the LED display, can be set or changed to 18", 20", 22", 24" or 26". There are five quick selection buttons to set the stride length. Press one of the 18" - 26" buttons to set the desired stride length. You can change the stride length at any time during training. The selected stride length is displayed through the blue LED light.

There are different reasons for a user wanting to change the stride length. First because of the height. A user who is smaller than 1.65m could feel more comfortable with a stride length of 18" (approx. 46 cm) to 22" (approx. 56 cm), while a user who is taller than 1.65 cm could feel more comfortable with a stride length of 22"(approx. 56 cm) to 26" (approx. 66 cm), because they can compensate for their stride length.

Furthermore, a user must adjust the stride length with higher speeds in order to compensate for their normal stride length while jogging/running. Another reason why a user may want to change the stride length during training is so that different muscle groups can be worked; a short stride length is demanding for different muscles in the legs and body than a long stride length. A stride length of 18" (approx. 46 cm) can be compared with a shorter kick motion and a stride length of 26" (approx. 66 cm) with a lunge without high stress, which would cause the same movement on a flat surface.

During training, adjusting the resistance or doing squats while holding on to the handle bars helps to isolate these muscles.

**NOTICE**

+ There is no right or wrong stride length for every usage. Select the stride length where you feel the most comfortable.
+ If the stride length motor is activated, you will hear how the motor unlocks and gets set. As soon as the motor has reached the desired stride length, you will hear a click and the motor will lock into the corresponding position.

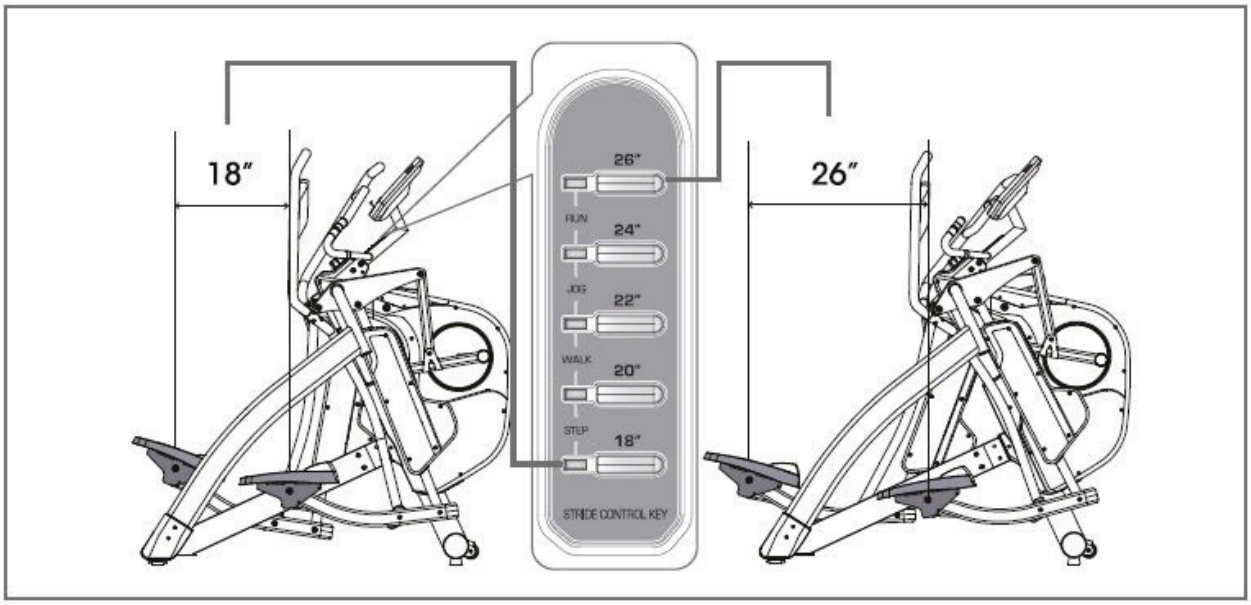

### **Step 13:** Alignment of the feet

If the floor is uneven, you can stabilize the equipment by turning the two setting screws under the main frame.

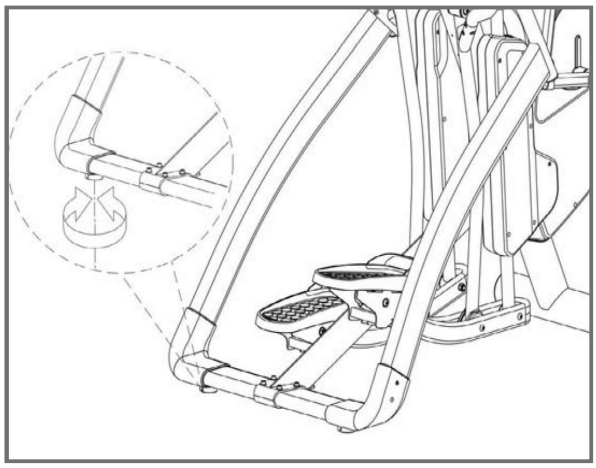

1. Lift the equipment on the desired side and rotate the setting screws under the main frame.
2. Rotate the screws clockwise in order to remove them and to raise the equipment.
3. Rotate them counterclockwise in order to lower the equipment.

### **Step 14:** Connecting the equipment to the mains supply

► **ATTENTION**
The equipment must not be connected to a multiple socket, otherwise it cannot be guaranteed that the equipment will be supplied with sufficient power. Technical errors can result.

1. Plug the cable into the socket on the main frame.
2. Plug the power plug into a wall outlet that complies with the instructions in the chapter on electrical safety.

ⓘ **NOTICE**
The overload switch protects from short circuits. The button jumps out in case of overload. Turn the power switch off and then on again to restart the equipment

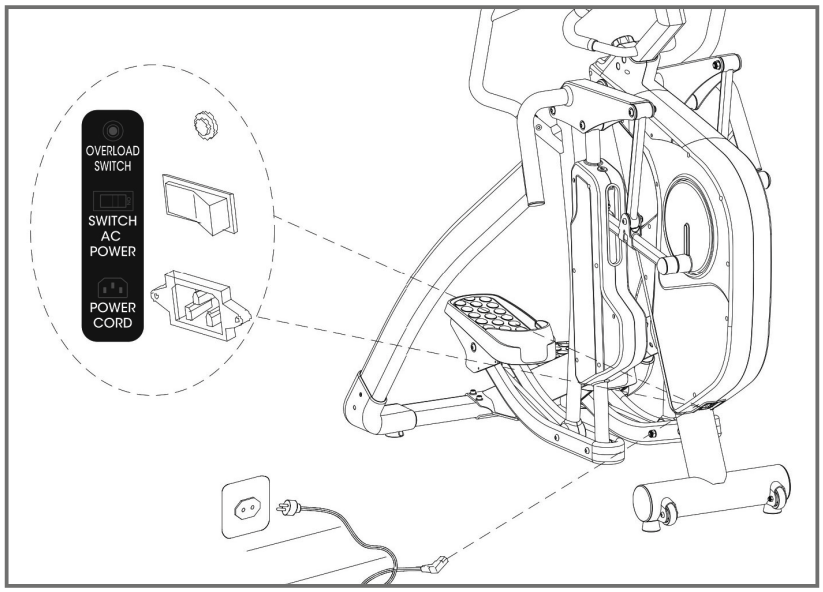

# 3 OPERATING INSTRUCTIONS

**NOTICE**
Familiarise yourself with all the functions and setting options of the device before starting training. Have the proper use of this product explained to you by a specialist.

## 3.1 Console Display

| | |
|---|---|
| **TIME** | Display range: 0:00–99:59<br>Setting range: 0–99 (Minuten) |
| **SPEED** | Display range: 0.0–99.9 (km/ml) |
| **RPM** | Display range: 0–999 |
| **CALORIES** | Display range: 0–999<br>Setting range: 0–990 |
| **PULSE** | Display range: 0–230<br>Setting range: 0–230 |
| **WATT** | Display range: 0–999<br>Setting range: 30–400 |
| **LOAD** | Display range: 1–16<br>Setting range: 1–16 |
| **DISTANCE** | Display range: 0–99.9<br>Setting range: 0–99.0 |

## 3.2 Button Functions

| | |
|---|---|
| **QUICK START** | + This button is used to switch on the console.<br>+ When the console is power saving mode, the Quick Start button can be used to activate the console<br>+ The Quick Start programme can be started with this key. |

## 3.3 Switching On and Initial Settings

1. Press the Quick Start button to turn on the console.

*The main menu opens.*

2. Tap on the time and date.
3. Turn on automatic time and date detection or select the appropriate time zone in which you are located.

ⓘ **NOTICE**
Make sure that the function for automatic time and date detection is switched off. If this function is switched on, it will light up turquoise.

4. Enter the time and date manually. To do this, first select a city in your time zone in the fourth row and, if necessary, set the time in the row above. Then set the current date in the second row.
5. Now connect the device to your Wi-Fi by returning to the settings and tapping Wi-Fi to connect to your network.

ⓘ **NOTICE**
If you receive the message "Connected, no Internet" although you are successfully connected to the Internet, this is no cause for concern. This is a translation issue and you should still be connected to the Internet. Then wait a few seconds until the message "This network has no Internet access. Stay connected?" appears, check the box "Don't ask again for this network" and confirm with "Yes".

6. You can now activate automatic time and date detection.
7. Finally, carry out an initial update for the console software.
8. Return to the settings.
9. Tap on "Software Update".
10. To update the software, tap on "Update" for TFT.

ⓘ **NOTICE**
+ The device must not be used or switched off during the update.
+ Check at regular intervals whether another update is available and perform it as described above.

Open the factory settings. Here you can set the following functions:

+ WIFI
+ Screen brightness
+ Volume
+ Language
+ Unit (metric or imperial)
+ Update software and app updates

► **ATTENTION**

The console of this fitness device uses software that is perfectly adapted to the equipment. Please do not make any unauthorised modifications, such as the installation of external apps. This can affect the functionality of the console or even make it unusable. Only install the necessary updates in the Software Updater.

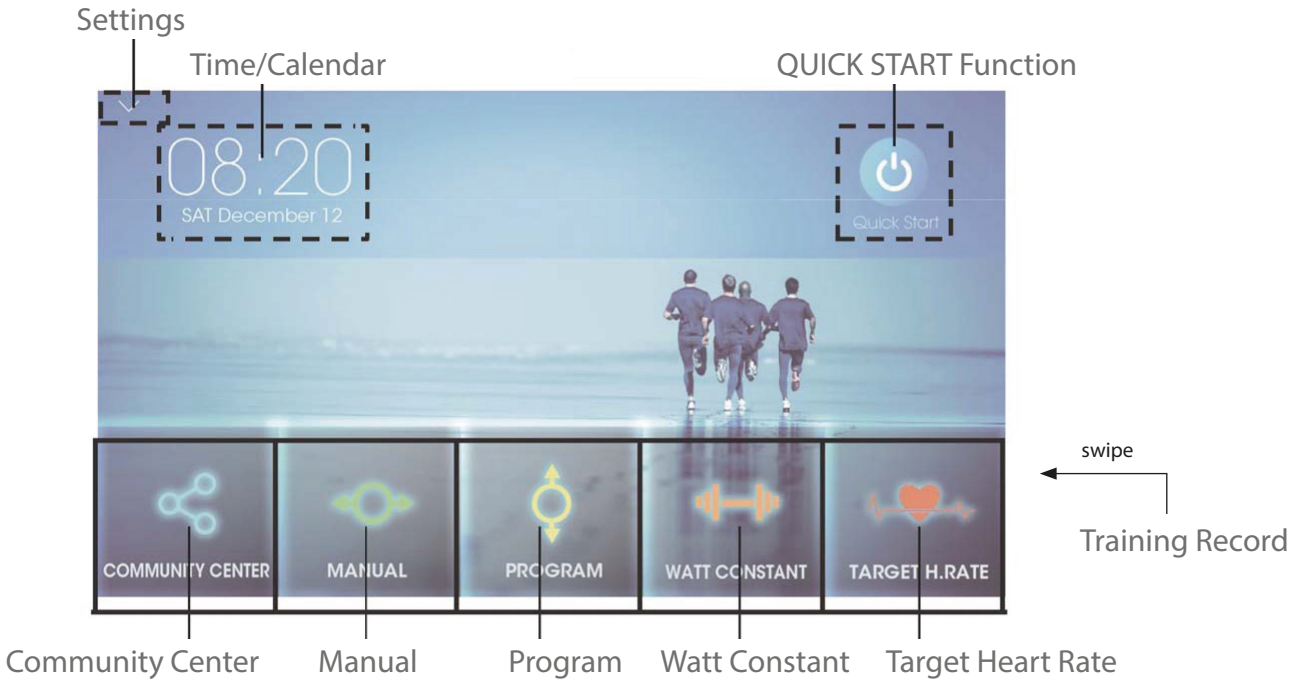


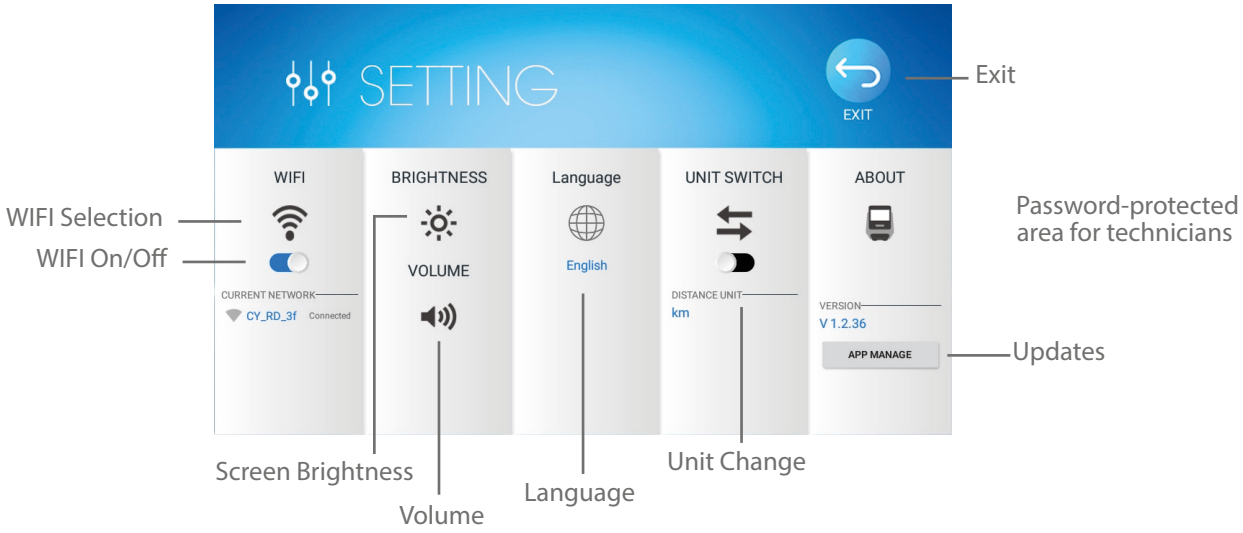

## 3.4 Programmes

There is a wide range of different programmes available. These include:

+ Quick Start Programme
+ Manual Programmes
+ Pre-set Programmes
+ Watt Programme
+ Heart Rate Controlled Programmes

ⓘ **NOTICE**
The user profile U0 acts as a guest profile. None of your training data is saved. If you use the guest profile U0, you must enter your data for age, height, weight and gender for each programme. The memory function is only available with the user profiles U1-U4. With the user profiles U1-U4, the set data is saved and must not be re-entered.

### 3.4.1 Quick-Start Programme

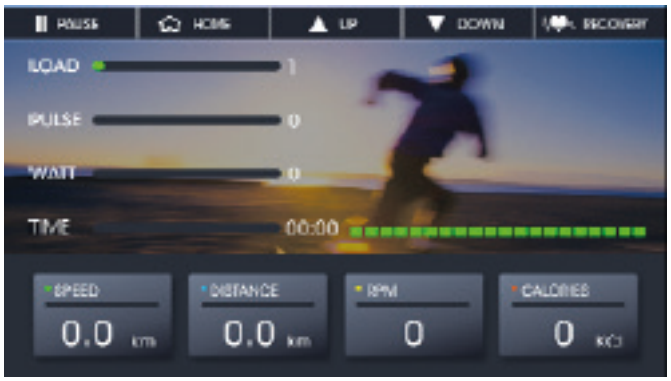


1. To start the quick-start programme, tap quick start in the main menu or press the quick start button.

*The programme starts.*

2. To increase or decrease resistance, tap the arrows.
3. To pause the programme, tap pause.
4. To resume the programme, tap continue.
5. To end the programme and return to the main menu, tap home.

## 3.4.2 Manual Programme

There are several setting options for the manual programme. You can decide whether you want to train with one or more values.

1. To select the manual programme, tap “Manual“ in the main menu.
2. Select one of the user profiles (U0–U4).
3. Set the desired values for time, distance and/or calories.
4. To start the programme, tap start.

*The programme starts. All set values will be counted down.*

5. To increase or decrease resistance, tap the arrows.
6. To pause the programme, tap pause.
7. To resume the programme, tap continue.
8. To end the programm and return to the main menu, tap home.

## 3.4.3 Pre-Set Programmes

1. To select the profile programmes, tap “Program“ in the main menu.
2. Select one of the user profiles (U0–U4).
3. Select one of the 60 profile programmes.
4. Set the desired training time.
5. To start the programme, tap start.

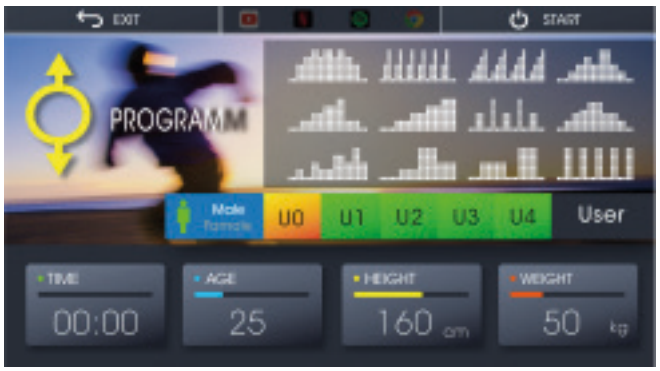


*The programme starts.*

6. To increase or decrease resistance, tap the arrows.
7. To pause the programme, tap pause.
8. To resume programme, tap continue.
9. To end the programme before the set training time has elapsed and return to the main menu, tap home.

### 3.4.4 Watt Programme

1. To select the watt programme, tap “Watt constant“ in the main menu.
2. Select one of the user profiles (U0–U4).
3. Set the desired training time and wattage.
4. To start the programme, tap start.

*The programme starts. At the bottom of the screen it is displayed whether you should pedal faster or slower to maintain the set wattage.*

5. To pause the programme, tap pause.
6. To resume the programme, tap continue.
7. To end the programme before the set training time has elapsed and return to the main menu, tap home.

### 3.4.5 Heart Rate Controlled Programmes

⚠ **WARNING**
Your training equipment is not a medical device. The heart rate measurement of this equipment may be inaccurate. Various factors can affect the accuracy of the heart rate measurement. The heart rate measurement serves only as a training aid.

There are four heart rate programmes available. You can choose between three pre-set target heart rates (55%, 75% or 90% of your maximum heart rate) or TAG where you enter an individual target heart rate manually. Your maximum heart rate is determined by the console depending on your age. For these programmes we recommend using a compatible chest strap.

ⓘ **NOTICE**
If you do not use a chest strap, your hands must be placed on the hand pulse sensors permanently during the workout.

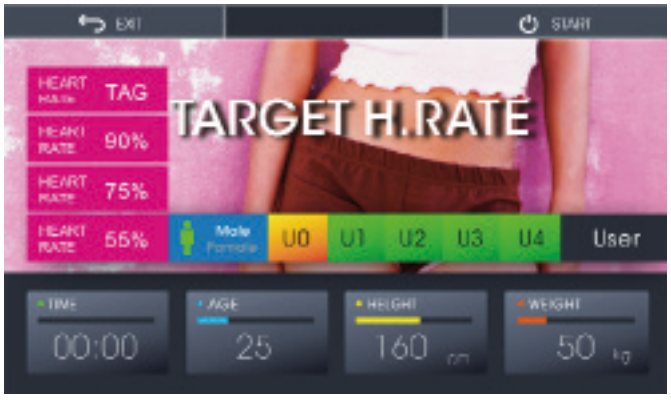


1. To select the heart rate controlled programmes, tap “Target H. Rate” in the main menu.
2. Select one of the user profiles (U0–U4).
3. Select either 55%, 75%, 90% or TAG.

3.1. If you have selected TAG, now set your individual target value.

4. Set the desired training time.
5. To start the programme, tap start.

*The programme starts.*

6. To increase or decrease resistance, tap the arrows.
7. To pause the programme, tap pause.
8. To resume the programme, tap continue.

9. To end the programme before the set training time has elapsed and return to the main menu, tap home.

## 3.5 Recovery Function

After a completed workout, you can use the recovery function to test your recovery heart rate and thus your fitness level.

1. To test your recovery heart rate, tap recovery after training.
2. Grasp the hand pulse sensors with both hands.

*After 60 seconds, your result will be displayed as a score (F1 –F6) where F1 is the best and F6 is the worst result.*

Exercise regularly to improve your fitness and recovery heart rate.

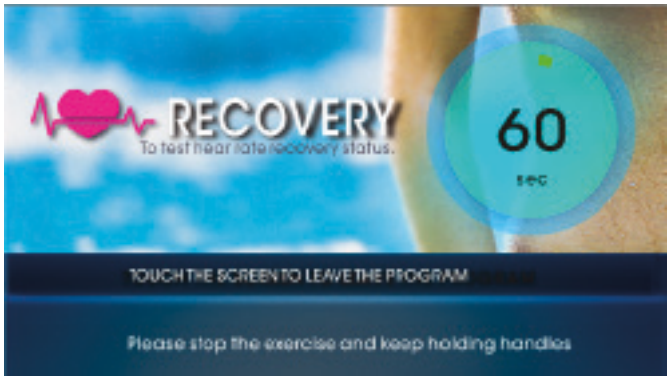

## 3.6 Training Record

The console offers you the possibility to use a training calendar and thus save your training sessions.

### After the workout

When your training programme has finished, "workout" lights up in the display.

1. To save the training data in the training calendar, first tap "save" and then tap "home" to exit.
2. If you do not want to save the training data, tap "home" directly and return to the main menu.

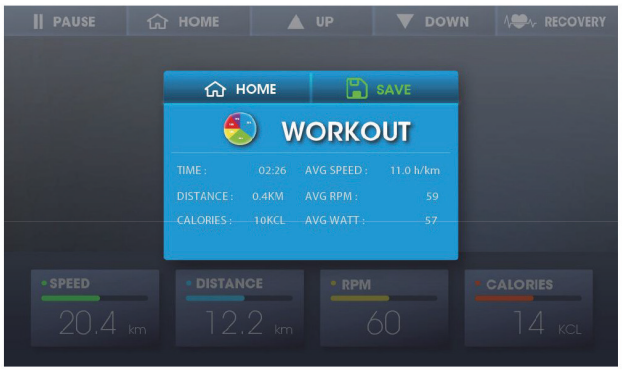


### Viewing the training calendar

To view your saved training sessions in the training calendar, swipe left and then tap "Training Record" at the bottom right of the main menu. A calendar of the current month is displayed.

**NOTICE**

You can switch back and forth between the months by swiping your finger left and right.

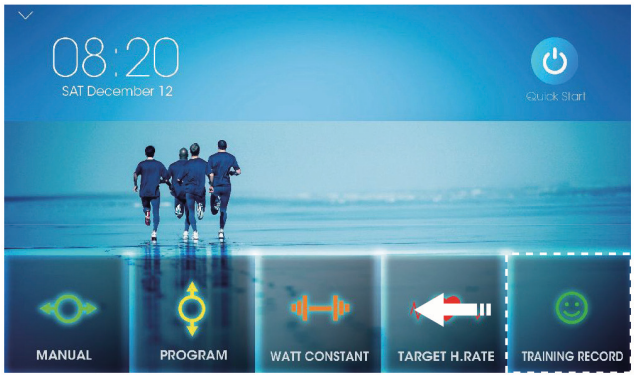

Where the calendar is coloured orange, a training session has been saved on that day. Tap on the corresponding day to view the more detailed training details. You can also delete the saved training data by tapping on the bin icon.

## 3.7 Multimedia and Software Updates

**► ATTENTION**

Check your TFT-console regularly for possible software updates. If available, make sure to carry out the updates soon. If the updates are not carried out over a longer period of time, this can lead to technical problems with the console.

To make sure the pre-installed apps are working correctly, they must be updated regularly as well. Follow the instructions on the screen to perform the updates.
Please note: The system is set up only for the pre-installed apps. Do not install any additional apps as their proper functionality can not be guaranteed. The installation of other apps might cause technical issues.

**ⓘ NOTICE**

+ The pre-installed apps are produced and provided by external manufacturers. Changes and availability within these apps might occur. Sport-Tiedje does not take any responsibility and can not be held liable for the availability, functionality or contents of these apps.
+ When the console is in MULTIMEDIA mode, it cannot enter power saving mode. If the console is not in use, please exit MULTIMEDIA mode and return to the main menu. Outside MULTIMEDIA mode, the console will enter power saving mode after 5 minutes.

In the media area you have access to various apps. These include:

+ YouTube
+ Netflix
+ Spotify
+ Chrome
+ iRoute
+ Kinomap

### 3.7.1 Retrieving Apps from the Main Menu

This way only the Quick-Start programme can be used

1. Tap Communication Centre in the Main Menu.
2. Select any app.
3. Tap the arrow on the left side of the screen.
4. Tap Quick Start and the programme starts.

### 3.7.2 Access to Apps During Your Workout

ⓘ **NOTICE**
The access to apps during the training is only possible within the manual programme or one of the profile programmes.

1. Start a desired programme.
2. To use an app during your workout, pause the programme for a moment and tap the desired app at the top of the screen.
3. Tap Continue and the app will open.

ⓘ **NOTICE**
It may take a moment for the app to open.

4. To continue your workout, tap the arrow on the left side of the screen and press the Quick Start button.

*The selected app now runs simultaneously with the running programme.*

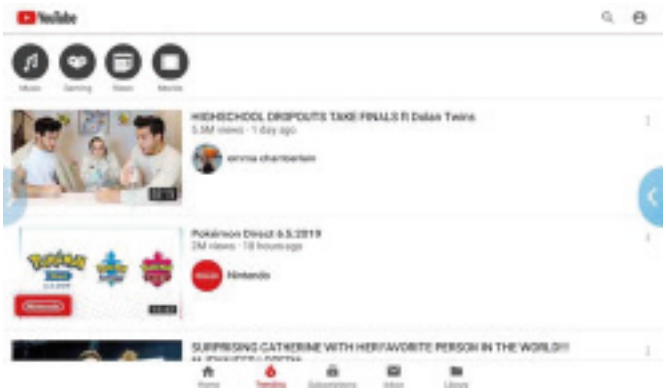

# 4 STORAGE AND TRANSPORT

## 4.1 General Instructions

⚠ **WARNING**

+ The storage location should be chosen so that improper use by third parties or children can be prevented.
+ If your equipment does not have transportation wheels, the equipment must be disassembled before transportation.

► **ATTENTION**

+ Make sure that the equipment is protected from moisture, dust and dirt in the selected storage location. The storage location should be dry and well ventilated and have a constant ambient temperature between 5°C and 45°C.

## 4.2 Transportation Wheels

► **ATTENTION**

If you want to transport your equipment over particularly sensitive and soft floor coverings, such as parquet, planks or laminate, lay out the transport route with cardboard or similar to avoid possible floor damage.

1. Stand behind the equipment and lift it until the weight is transferred to the transportation wheels. After that, you easily can move the equipment to a new position. For long transport distances the equipment should be disassembled and safely packed.
2. Select the new location by following the instructions in the section 1.4 of this manual.

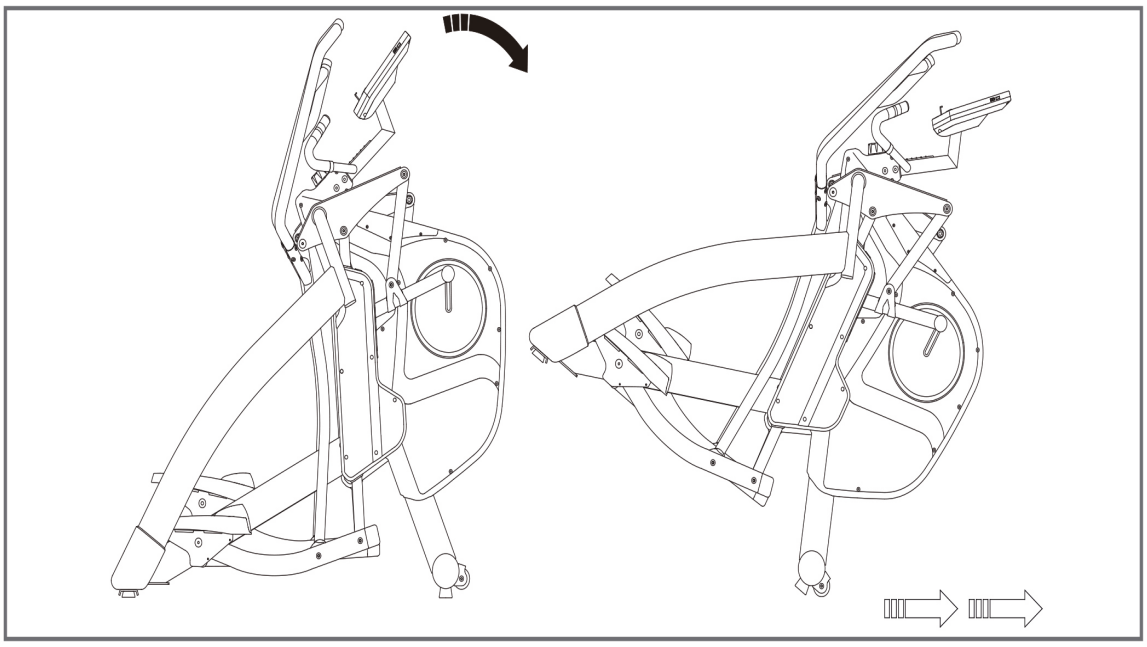

## 5.1 General Instructions

⚠ **WARNING**

+ Do not make any improper changes to the equipment.

⚠ **CAUTION**

+ Damaged or worn components may affect your safety and the life of the equipment. Therefore, immediately replace damaged or worn components. In such a case, contact the contract partner. The equipment must not be used until it has been repaired. If necessary, use only original spare parts.

► **ATTENTION**

+ In addition to the instructions and recommendations for maintenance and care given here, additional service and/or repair work may be necessary; this must only be carried out by authorised service technicians.

## 5.2 Faults and Fault Diagnosis

The equipment undergoes regular quality controls during production. Nevertheless, faults or malfunctions may occur. Frequently, individual parts are responsible for these disturbances, an exchange is usually sufficient. Please refer to the following overview for the most common errors and how to correct them. If the equipment still does not function properly, contact your contract partner.

| Fault | Cause | Solution |
|---|---|---|
| Drive disks wobble/ make noises | Drive disk loose | Tighten nut (pay attention to left-hand / right-hand thread) |
| Display is blank/is not working | Loose cable connections | Check cable connections |
| Equipment wobbles | Equipment is not level | Align the feet |
| Creaking noises on the stepping area | Loose screws on stepping area | Tighten the screws on the stepping area |
| Creaking noises | Screw connections loosened or too tight | Check screw connections |
| Squeaking noises on the guide rails | Guide rails or rollers dirty or guide rails dry | Clean the guide rails and then lubricate them with a suitable lubricant |
| Software problems | Software version not up to date | + Check whether there is an update for the software (TFT) and carry it out.<br>+ If the problems persist, contact your contract partner. |

| | | |
|---|---|---|
| No pulse display | + Sources of interference in the room<br>+ unsuitable chest strap<br>+ Wrong position of chest strap<br>+ Chest strap defective or battery empty<br>+ Pulse display defective | + Eliminate sources of interference (e.g. mobile phone, WLAN, lawn mower and vacuum cleaner robot, etc. ...)<br>+ Use a suitable chest strap (see RECOMMENDED ACCESSORIES).<br>+ Reposition chest strap and/or moisten electrodes<br>+ Changing batteries<br>+ Check if pulse display by hand pulse possible |

## 5.3 Maintenance and Inspection Calendar

To avoid damage from body sweat, the equipment must be cleaned with a damp towel (no solvents!) after each training session.

The following routine tasks must be performed at the specified intervals:

| Part | Weekly | Monthly | Quarterly |
|---|---|---|---|
| Display console | C | I | |
| Slide rails* | | C | |
| Lubrication of slide rails and moving parts* | | | I |
| Plastic covers | C | I | |
| Screws and cable connections | | I | |
| Legend: C = clean; I = inspect | | | |

*Make sure to always clean the slide rails and moving parts before re-lubricating.

# 6 DISPOSAL

At the end of its operational life, this equipment cannot be disposed of in normal household waste. Instead, it must be disposed of via an electricals recycling centre. Further information can be obtained from your local authority's recycling service.

The materials can be recycled as per their symbols. Through the reuse, recycling of materials or other forms of recovery of old equipment, you make an important contribution to the protection of the environment.

# 7 RECOMMENDED ACCESSORIES

To make your training experience even more efficient and pleasant, we recommend that you add suiting accessories to your fitness equipment. For elliptical cross trainers this could for example be a **floor mat**, which makes your fitness equipment stand more securely and also protects the floor from sweat or **silicone spray** to keep moving parts in good shape.

If you have purchased a fitness machine with pulse training and want to train your heart rate, we strongly recommend that you use a compatible **chest strap**, as this ensures optimum transmission of the heart rate.

Our range of accessories offers the highest quality and makes training even better. If you would like to find out more about compatible accessories, please go to the detail page of the product in our webshop (the easiest way is to enter the article number in the search field above) and go to the recommended accessories on this page. Alternatively, you can use the QR code provided. Of course, you can also contact our customer service: by telephone, e-mail, in one of our branches or via our social media channels. We will be happy to advise you!

floor mat

chest strap

chest strap contact gel

silicone spray

towels

## 8.1 Serial Number and Model Name

In order to provide you with the best possible service, please have the model name, article number, serial number, exploded drawing and parts list ready. The corresponding contact options can be found in chapter 10 of this operating manual.

ⓘ **NOTICE**
The serial number of your equipment is unique. It's located on a white sticker. The exact position of this sticker is shown in the following illustration.

Enter the serial number in the appropriate field.

**Serial number:**

| |
|---|
| |

**Brand / Category:**

| |
|---|
| cardiostrong / crosstrainer |

**Model Name:**

| |
|---|
| EX90 Touch |

**Article Number:**

| |
|---|
| CST-EX90-PLUS-T |

## 8.2 Parts List

| No. | Name | Qty. | No. | Name | Qty. |
|---|---|---|---|---|---|
| A | MAIN FRAME | 1 | A49 | AXLE Φ25x160mm | 1 |
| A1 | SENSOR WIRE 900mm | 1 | A50 | MAGNETIC Φ15x7 | 1 |
| A2 | CONTROLLER WIRE 500mm | 1 | A51 | BELT WHEEL Φ360 (J10) | 1 |
| A3 | KONB | 1 | A52 | BELT 530 (1355mm)Xj8 | 1 |
| A4 | CONNECTION SLICE 40 (4T) | 4 | A53 | NUT M8 | 14 |
| A5 | INCLINE MOTOR SENSOR WIRE | 2 | A54 | OSCILLATING AXLE BASE ( R ) | 1 |
| A8 | INCLINE MOTOR CONTROL BOX | 1 | A55 | OSCILLATING AXLE BASE ( L ) | 1 |
| A9 | SCREW M5x10 | 2 | A56 | HANDLEBAR SUPPORTING CO-VER | 2 |
| A10 | ADAPTOR | 1 | A57 | BEARING 6905 (TPX) | 2 |
| A11 | DC WIRE600mm | 1 | A58 | END CAP Φ 4" | 2 |
| A12 | SOCKET | 2 | A59 | FIX CUSHION Φ50TPR | 2 |
| A13 | NUT | 1 | A60 | WASHER M6x2TxΦ19 | 2 |
| A14 | SCREW M3x8 | 4 | A61 | SCREW3/16"x5/8 | 2 |
| A15 | SENSOR WIRE 100mm | 1 | A62 | FRONT CONNECTING SHAFT | 2 |
| A15-1 | SENSOR WIRE HOUSING | 1 | A63 | END CAP | 1 |
| A15-2 | SENSOR WIRE HOUSING SCREW | 1 | A64 | BUSH Φ12.1xΦ16x20mm | 4 |
| A16 | MOTOR | 1 | A65 | CLIP (36) | 8 |
| A17 | WIRE (OVERLOAD SWITCH TO AC POWER SWITC | 1 | A66 | BEARING 6004 (TPX) | 2 |
| A18 | BEARING 6005zz (TPX) | 2 | A67 | BEARING SLEEVEΦ42x3T | 8 |
| A19 | BRAKE DEVICE (3T) | 1 | A68 | SCREW M8x45 | 2 |
| A20 | SCREW M6x43 | 1 | A69 | NUT M4 | 10 |
| A21 | SCREW M8x16 | 1 | A71 | CRANK CONNECTING SHAFT | 2 |
| A22 | WASHER M10 | 2 | A72 | BEARING 2203 (MRB) | 2 |
| A23 | OVERLOAD SWITCH | 1 | A73 | NUT M10 | 2 |
| A24 | WIRE (OVERLOAD SWITCH TO AC POWER SWITC | 1 | A74 | CLIP (R40) | 2 |
| A25 | POWER CONNECTION WIRE | 1 | A75 | BUSH Φ12.1xΦ16x10.5mm | 4 |
| A26 | SWITCH AC POWER | 1 | A76 | SCREW M4x38mm | 4 |
| A27 | POWER CORD SOCKET | 1 | A77 | FLAT KEY 7x7x20mm | 2 |
| A28 | SCREW M3x10 | 2 | A80 | FRONT PEDAL SUPPORTING TUBE | 2 |

| | | | | | |
|---|---|---|---|---|---|
| A29 | SCREW M8x10 | 2 | A81 | WASHER M10xΦ27x2T | 2 |
| A30 | TRANSPORTATION WHEEL | 2 | A82 | SCREW M10x40mm | 2 |
| A31 | SCREW M12x53 | 4 | A83 | NUT | 4 |
| A32 | PRESSING PIPE | 1 | A84 | BRAKE | 1 |
| A33 | WASHER Φ10xΦ23x2T | 2 | A85 | SPRING | 1 |
| A34 | BEARING 6200 (MRB) | 2 | A87 | AXLE FOR MOTOR PUSH ROD | 2 |
| A35 | SCREW M10x30 | 1 | A88 | NUT | 2 |
| A36 | JSHAPE SCREW M6 | 1 | A89 | NYLON SLEEVE | 8 |
| A37 | WIRE (AC POWER SWITCH TO POWER CORD) | 1 | A90 | PUSH ROD BRACKET (FRONT) | 2 |
| A38 | WASHER M6x Φ16xΦ29.2x2T | 1 | A91 | END CAP | 1 |
| A39 | GROUND WIRE | 1 | A93 | PUSH ROD BRACKET (REAR) | 2 |
| A40 | POWER CORD | 1 | A94 | SCREW M8x20 | 8 |
| A41 | FLYWHEEL Φ327 | 1 | A95 | SCREW 5/32"x3/4" (M4x19mm) | 12 |
| A42 | NUT3/8" | 2 | A96 | NUT M6 | 2 |
| A43 | TENSION CABLE 400mm | 1 | A97 | SIDE DECORATION HOUSING SET ( L ) | 2 |
| A44 | SCREW M5x10 | 4 | A98 | SIDE DECORATION HOUSING SET ( R ) | 2 |
| A45 | TURING PLATE | 2 | A99 | FRONTSIDE DECORATION COVER | 2 |
| A46 | CRANK | 2 | A100 | SCREW M4x20 | 10 |
| A47 | BEARING NUT | 1 | A101 | END CAP | 4 |
| A47-1 | BUSH Φ25.2xΦ29.2x54.5mm | 1 | A102 | SMALL CHAIN COVER ( L ) | 1 |
| A47-2 | BUSH Φ25.2xΦ29.2x5mm | 1 | A103 | MAIN CHAIN COVER ( L ) | 1 |
| A48 | SCREW M8x25 | 4 | A104 | UPPER DECORATION HOUSING | 1 |
| A105 | SMALL CHAIN COVER ( R ) | 1 | D3 | SENSOR WIRE 300mm | 1 |
| A106 | MAIN CHAIN COVER ( R ) | 1 | D4 | HANDLE PULSE WIRE | 2 |
| A107 | SCREW M4x12 | 8 | D5 | HANDLE PULSE RING Φ31.8x0.9Tx19.5mm | 2 |
| A108 | MOTOR SENSOR WIRE HOUSING | 2 | D6 | SPACER RING Φ32x30.4 | 2 |
| A109 | MOTOR SENSOR WIRE HOUSING SCREW | 2 | D7 | HANDLE PULSE | 4 |
| A110 | END CAP | 2 | D8 | UPPER HANDLE PULSE HOUSING | 2 |
| A111 | CRANK HOUSING | 2 | D9 | LOWER HANDLE PULSE HOUSING | 2 |
| A112 | SCREW | 2 | D10 | HANDLE PULSE RING Φ31.8x0.9Tx30.5mm | 2 |

| | | | | | |
|---|---|---|---|---|---|
| A113 | SIDE DECORATION HOUSING SCREW | 4 | D11 | PLASTIC PIPE | 2 |
| B1 | PEDAL SUPPORTING TUBE ( L ) | 1 | D12 | FOAM SPACER RING Φ32xΦ25.8x-10mm | 2 |
| B2 | PEDAL SUPPORTING TUBE ( R ) | 1 | D13 | SPONG HDR Φ23x3Tx150mm | 2 |
| B3 | BEARING SLEEVE | 4 | D14 | SENSOR WIRE | 1 |
| B4 | BEARING 6201 (TPX) | 8 | D15 | SCREW M3x8 | 4 |
| B5 | LOWER PEDAL SUPPORTING TUBE | 2 | D16 | SENSOR WIRE | 1 |
| B7 | PEDAL BRACKET ( L ) | 1 | D17 | TOGGLE COVER L1 | 1 |
| B8 | PEDAL BRACKET ( R ) | 1 | D18 | TOGGLE COVER L2 | 1 |
| B9 | PEDAL REST ( L ) | 1 | D19 | PC BOARD LOAD - | 1 |
| B10 | PEDAL REST ( R ) | 1 | D20 | TOGGLE LOAD - | 1 |
| B11 | FRONT COVER PEDAL ( L ) | 1 | D21 | TOGGLE COVER R1 | 1 |
| B12 | CUSHION PAD ( L ) | 1 | D22 | TOGGLE COVER R2 | 1 |
| B13 | PEDAL ( L ) | 1 | D23 | PC BOARD LOAD + | 1 |
| B14 | SCREW 5/32"x5/8" (M4x15mm) | 6 | D24 | TOGGLE LOAD + | 1 |
| B15 | SCREW M6x10mm | 8 | D25 | SCREW | 4 |
| B16 | PEDAL ( R ) | 1 | D26 | SENSOR WIRE | 1 |
| B17 | CUSHION PAD ( R ) | 1 | D27 | SENSOR WIRE | 1 |
| B18 | FRONT COVER PEDAL ( R ) | 1 | E1 | HANDLE BAR ( L ) | 1 |
| B19 | UPPER CAP FOR PEDAL SUPPOR-TING 20x60 | 2 | E2 | HANDLE BAR ( R ) | 1 |
| B20 | LOWER CAP FOR PEDAL SUPPOR-TING 20x60 | 2 | F1 | CENTRAL SUPPORTING TUBE | 1 |
| B21 | SCREW5/32"x1/2" | 8 | F2 | IRON BRACKET | 1 |
| B22 | MIDDLE PEDAL SUPPORTING ROD | 2 | G | CONSOLE | 1 |
| B23 | NUT M8 | 4 | G1 | CONSOLE SCREW M5x10 | 4 |
| B24 | BUSH Φ8x(Φ12+Φ15) | 1 | G2 | STRIDE LED SENSOR BOARD | 1 |
| B25 | BEARING 6001 (TPX) | 4 | H | WATER BOTTLE HOLDER | 1 |
| B27 | SCREW M8x45 | 4 | J1 | SCREW M10x16 | 4 |
| B30 | SCREW M12x133 | 2 | J2 | SCREW M4x16 | 6 |
| B31 | BUSH Φ15xΦ12.35x90mm | 2 | J3 | SCREW M4x6 | 2 |
| B32 | BEARING 6003zz | 16 | J4 | SCREW M8x55 | 4 |
| B33 | BUSH | 2 | J5 | WASHER M8x18 | 4 |
| B34 | PEDAL HOUSING ( R ) | 2 | J6 | SCREW M8x20 | 2 |

| | | | | | |
|---|---|---|---|---|---|
| B35 | PEDAL HOUSING ( L ) | 2 | J7 | SCREW M12x73 | 6 |
| B36 | SCREW | 4 | J8 | WASHER M12x20 | 18 |
| B37 | PEDAL REINFORCEMENT STRIP | 4 | J9 | NUT M12 | 18 |
| B38 | SCREW | 8 | J10 | SCREW M12x109 | 4 |
| C1 | SIDE CONNECTING TUBE ( L ) | 1 | J11 | HANDLE BAR SCREW | 6 |
| C2 | SIDE CONNECTING TUBE ( R ) | 1 | J12 | HANDLE BAR SCREW | 6 |
| C3 | END CAP | 2 | J13 | SCREW M8x16 | 4 |
| C4 | ADJUSTED NUT | 2 | J14 | WATER BOTTLE HOLDER SCREW | 2 |
| C5 | ADJUSTED END Φ50 | 2 | L1 | SIDE TUBE COVER SET (L1) | 1 |
| D | CONSOLE SUPPORTING TUBE | 1 | L2 | SIDE TUBE COVER SET (L2) | 1 |
| D1 | SENSOR WIRE 350mm | 1 | L3 | SIDE TUBE COVER SET (L3) | 1 |
| D2 | SENSOR WIRE 200mm | 1 | L4 | SIDE TUBE COVER SET (L4) | 1 |
| R1 | SIDE TUBE COVER SET (R1) | 1 | M4 | SCREW | 2 |
| R2 | SIDE TUBE COVER SET (R2) | 1 | N1 | BUSH Φ12.05*17*21.2mm | 4 |
| R3 | SIDE TUBE COVER SET (R3) | 1 | N2 | CLIP (R40) | 2 |
| R4 | SIDE TUBE COVER SET (R4) | 1 | N3 | BEARING 2203(MRB) | 2 |
| M1 | BUSH | 6 | N4 | SPACER RING (L) | 4 |
| M2 | CLIP R32 | 8 | N5 | SPACER RING (R) | 4 |
| M3 | MOTOR | 2 | N6 | SCREW | 8 |

## 8.3 Exploded Drawing

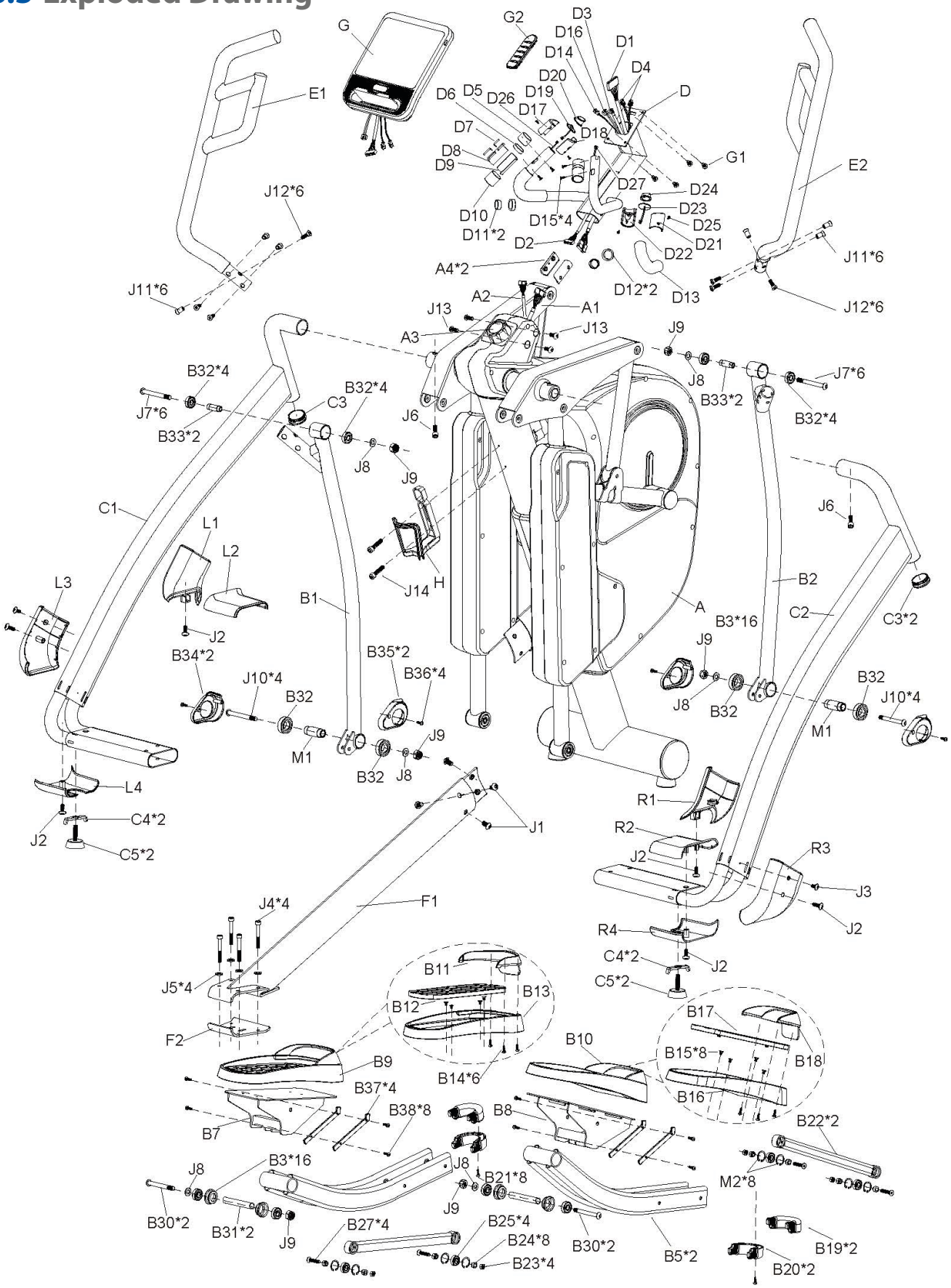


1

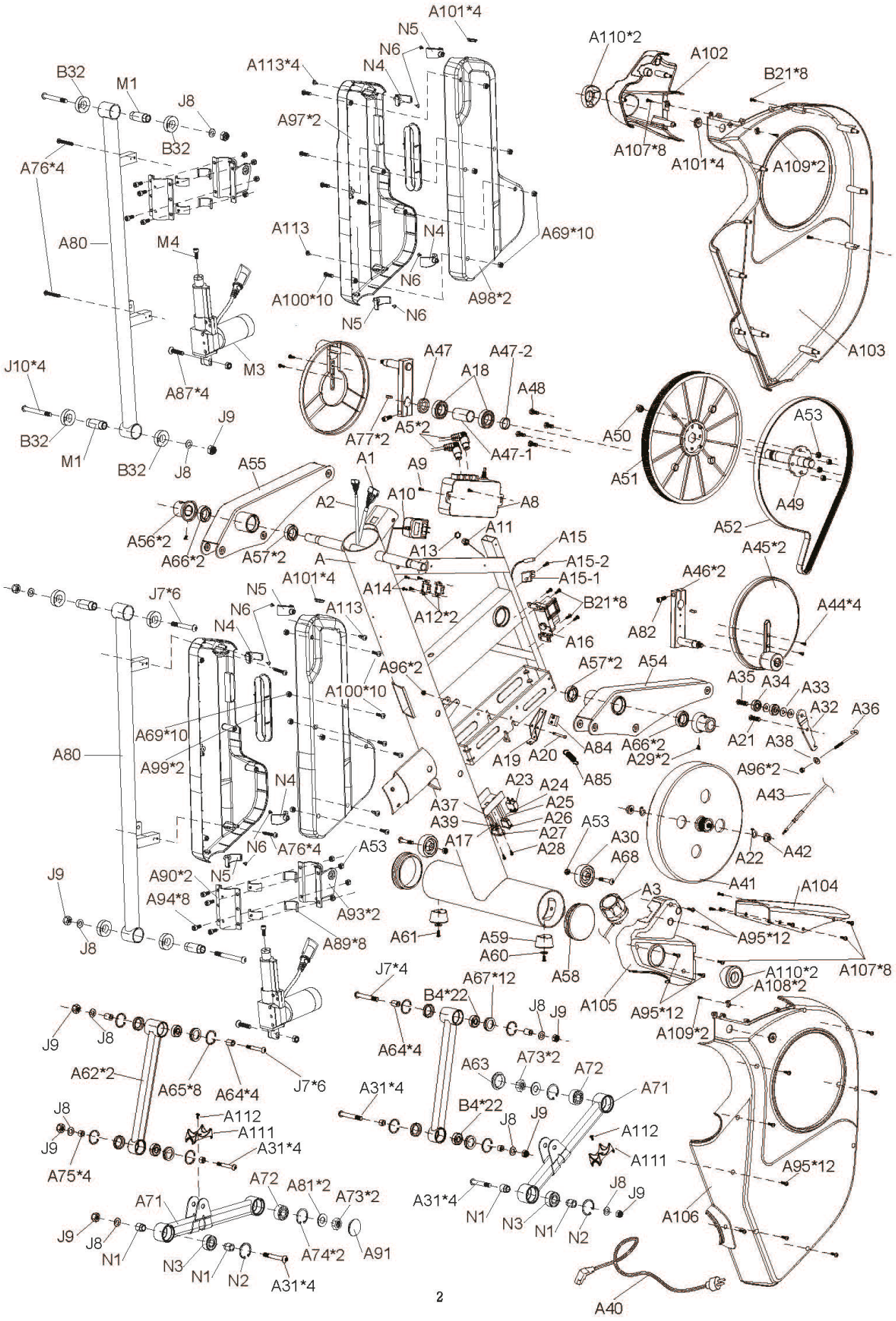
A101*4
N5
N6
N4
A113*4
A97*2
A113
N4
A69*10
N6
A100*10
N5
N6
A98*2
A110*2
A102
B21*8
A107*8
A101*4
A109*2
A103
B32
M1
J8
B32
A76*4
A80
M4
M3
A87*4
J10*4
B32
M1
B32
J8
J9
A47
A47-2
A18
A48
A5*2
A77*2
A47-1
A50
A51
A53
A49
A52
A45*2
A55
A56*2
A66*2
A57*2
A1
A9
A10
A8
A2
A11
A13
A15
A15-2
A15-1
A
A14
A12*2
B21*8
A16
A101*4
N5
N6
N4
A113
J7*6
A96*2
A100*10
A69*10
A99*2
A80
N4
A46*2
A82
A44*4
A57*2
A54
A35
A34
A33
A32
A36
A21
A38
A84
A66*2
A29*2
A19
A20
A85
A96*2
A43
A23
A24
A25
A26
A27
A28
A37
A39
A17
A53
A30
A68
A22
A42
A41
A104
A3
A95*12
A107*8
A110*2
A108*2
A105
A95*12
A109*2
A58
A59
A60
A61
A90*2
A94*8
N5
A76*4
A53
A93*2
A89*8
J9
J8
J7*4
A67*12
B4*22
J8
J9
A64*4
A62*2
A65*8
A64*4
J7*6
A63
A73*2
A72
A71
A31*4
B4*22
J8
J9
A112
A111
A31*4
A75*4
A72
A81*2
A73*2
A71
A74*2
A91
N1
N3
N1
N2
A31*4
A106
A40
2

# 9 WARRANTY

Training equipment from Taurus® is subject to strict quality control. However, if a fitness equipment purchased from us does not work perfectly, we take it very seriously and ask you to contact our customer service as indicated. We are happy to help you by phone via our service hotline.

**Error Descriptions**
Your fitness equipment is developed for long-term, high-quality training. However, should a problem arise, please first read the operating instructions. For further assistance, please contact your contract partner or call our service hotline. To ensure your problem is solved as quickly as possible, please describe the defect as exactly as possible.

In addition to the statutory warranty, we provide a warranty for every fitness equipment purchased from us according to the following provisions.
**Your statutory rights are not affected.**

**Warrantee**
The warrantee is the first/original buyer and/or any person who received a newly purchased product as a gift from the original buyer.

**Warranty period**
The warranty periods, shown on our web shop, begin on delivery of the fitness equipment. The respective warranty periods for your equipment can be found on its product website.

**Repair Costs**
According to our choice, there will either be a repair, a replacement of individual damaged parts or a complete replacement. Spare parts, that have to be mounted while assembling the equipment, have to be replaced by the warrantee personally and are not a part of repair. After the expiration of the warranty period for repair costs, a pure parts warranty applies, which does not include the repair, installation and delivery costs.

**The terms of use are defined as follows:**

+ Home use: solely for private use in private households up to 3 hours per day
+ Semi-professional use: up to 6 hours per day (e. g. rehabilitation centres, hotels, clubs, company gyms)
+ Professional use: more than 6 hours per day (e. g. commercial gyms)

**Warranty Service**
Within the warranty period, equipment which develops faults as a result of material or manufacturing defects, will be repaired or replaced at our discretion. Ownership of equipment or parts of equipment which have been replaced is transferred to us. The warranty period is not extended nor does a new warranty period begin following repair or replacement under the warranty.

**Warranty Conditions**
For the warranty to be valid, the following steps must be taken:

Please contact our customer service by email or phone. If the product under warranty has to be sent in for repair, the seller bears costs. After expiry of the warranty, the buyer bears the costs of transport and insurance. If the fault is covered by our warranty, you will receive a new or repaired equipment in return.

**Warranty claims are invalid in case of damage resulting from:**

+ misuse or improper handling
+ environmental influences (moisture, heat, electrical surge, dust, etc.)
+ failure to follow the current safety measures for the equipment
+ failure to follow the operating instructions
+ use of force (e. g. hitting, kicking, falling)
+ interventions which were not carried out by one of our authorized service centres
+ unauthorised repair attempts

**Proof of Purchase and Serial Number**
Please make sure that you are able to provide the appropriate receipt when claiming on your warranty. So that we can clearly identify the model of your equipment, and for the purposes of our quality control, you will need to give the serial number of your equipment, when contacting the service team. Where possible please have your serial number and your customer number ready when you call our service hotline. It will help us to deal with your request swiftly.

If you cannot find the serial number on your fitness equipment, our service team is at your disposal to offer further information.

**Service outside of the Warranty Period**
We are also happy to issue an individual cost estimate if there is a problem with your fitness equipment after the warranty has expired, or in cases which do not fall under the terms of the warranty, e. g. normal wear and tear. Please contact our customer service team to find a quick and cost-effective solution to your problem. In such a case you will be responsible for the delivery costs.

**Communication**
Many problems can be solved just by speaking to us as your specialist supplier. We know how important it is to you as a user of the fitness equipment to have problems solved quickly and simply, so you can enjoy working out with minimal interruption. For that reason, we also want to resolve your queries quickly and in a straightforward manner. Thus, please always keep your customer number and the serial number of the faulty equipment handy.

# 10 CONTACT

## DE

**TECHNIK**

+49 4621 4210-900
+49 4621 4210-698
technik@sport-tiedje.de
Öffnungszeiten entnehmen Sie unserer Homepage.

**SERVICE**

0800 20 20277
(kostenlos)
info@sport-tiedje.de
Öffnungszeiten entnehmen Sie unserer Homepage.

## DK

**TEKNIK OG SERVICE**

80 90 16 50
+49 4621 4210-945
info@fitshop.dk
Åbningstider kan findes på hjemmesiden.

## FR

**TECHNIQUE & SERVICE**

+33 (0) 172 770033
+49 4621 4210-933
service-france@fitshop.fr
Vous trouverez les heures d'ouverture sur notre site Internet.

## PL

**TECHNIKA I SERWIS**

22 307 43 21
+49 4621 42 10-948
info@fitshop.pl
Godziny otwarcia można znaleźć na stronie głównej.

## BE

**TECHNIQUE & SERVICE**

02 732 46 77
+49 4621 42 10-932
info@fitshop.be
Vous trouverez les heures d'ouverture sur notre site Internet.

## UK

**CUSTOMER CARE**

+44 141 737 2249
customercare@powerhouse-fitness.co.uk
You can find the opening hours on our homepage.

## NL

**TECHNISCHE DIENST & SERVICE**

+31 172 619961
info@fitshop.nl
De openingstijden vindt u op onze homepage.

## INT

**TECHNICAL SUPPORT & SERVICE**

+49 4621 4210-944
service-int@sport-tiedje.de
You can find the opening hours on our homepage.

## AT

**TECHNIK & SERVICE**

0800 20 20277
(Freecall)
+49 4621 42 10-0
info@sport-tiedje.at
Öffnungszeiten entnehmen Sie unserer Homepage.

## CH

**TECHNIK & SERVICE**

0800 202 027
+49 4621 42 10-0
info@sport-tiedje.ch
Öffnungszeiten entnehmen Sie unserer Homepage.

Please find a detailed overview including address and opening hours for all stores of the Sport-Tiedje Group in Germany and abroad on the following website:

www.sport-tiedje.com/en/stores

# WE LIVE FITNESS

## WEBSHOP AND SOCIAL MEDIA

Sport-Tiedje is Europe's largest specialist store for home fitness equipment with currently over 70 stores and one of the world's most renowned online mail order companies for fitness equipment. Private customers order via the 25 web shops in the respective national language or have their desired equipment assembled on site. In addition, the company supplies fitness studios, hotels, sports clubs, companies and physio practices with professional equipment for endurance and strength training.

Sport-Tiedje offers a wide range of fitness equipment from renowned manufacturers, high-quality in-house developments and comprehensive services, such as a build-up service and sports scientific advice before and after the purchase. The company employs numerous sports scientists, fitness trainers and competitive athletes.

Visit us also on our social media platforms or our blog!

www.sport-tiedje.co.uk
www.sport-tiedje.de/blog

www.facebook.com/SportTiedje

www.instagram.com/sporttiedje

www.youtube.com/user/sporttiedje

TAURUS

cardiostrong

BODYCRAFT

cardiojump

DUKEFITNESS

DARWIN

Notes

Notes

Notes

cardiostrong®

Crosstrainer EX90 Touch