BODYCRAFT

Assembly and Operating Instructions

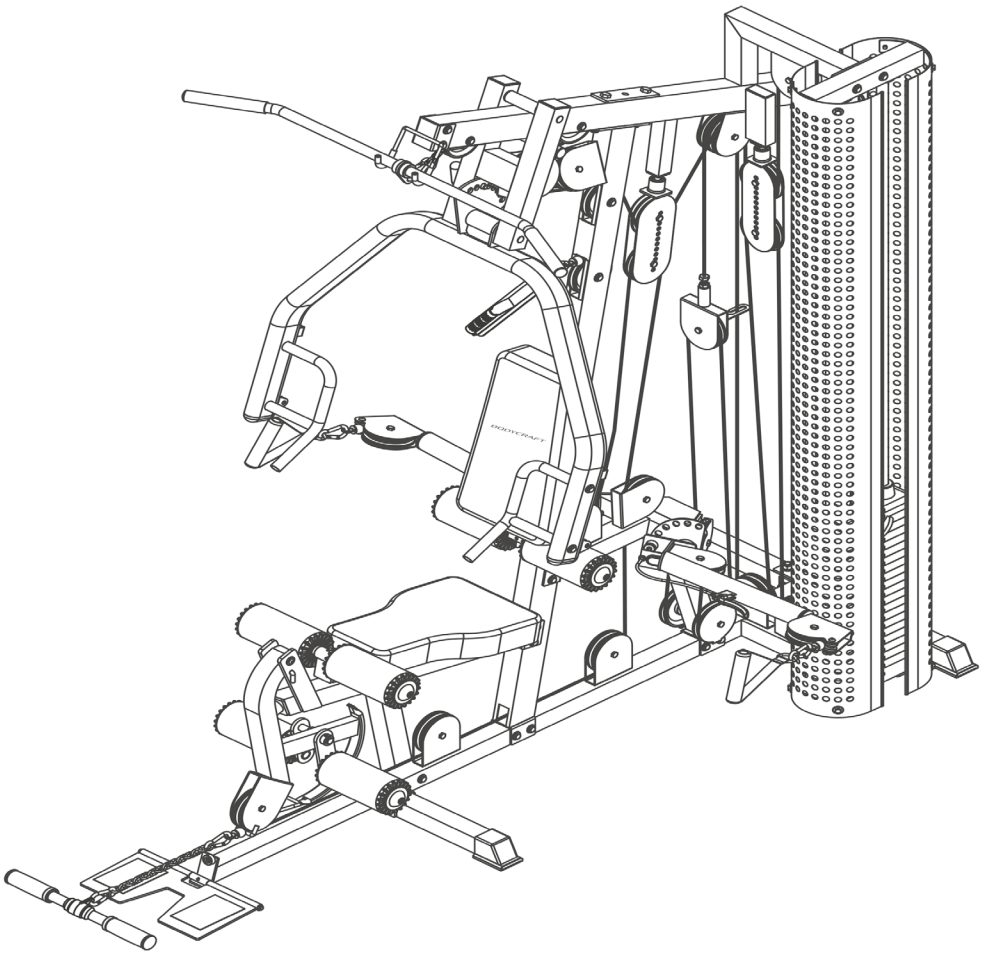

max. 130 kg

~ 240 Min.

120 kg

L 210 | W 144 | H 210

BC-SW95.0202.01.02

Art. No. BC-SW-95.0202

BodyCraft X-Press Pro

Content

1	GENERAL INFORMATION	6
1.1	Technical Data	6
1.2	Personal Safety	7
1.3	Set-Up Place	8
2	ASSEMBLY	9
2.1	General Instructions	9
2.2	Scope of Delivery	10
2.3	Assembly	12
3	STORAGE AND TRANSPORT	21
3.1	General Instructions	21
4	TROUBLESHOOTING, CARE AND MAINTENANCE	22
4.1	General Instructions	22
4.2	Faults and Fault Diagnosis	22
4.3	Maintenance and Inspection Calendar	23
5	DISPOSAL	23
6	RECOMMENDED ACCESSORIES	24
7	ORDERING SPARE PARTS	25
7.1	Serial Number and Model Name	25
7.2	Parts List	26
7.3	Exploded Drawing	28
8	WARRANTY	29
9	CONTACT	31

Dear customer,

Thank you for choosing a high-quality equipment of the brand BodyCraft®. BodyCraft® offers sports and fitness equipment for the sophisticated home sport and the equipment of fitness studios and business customers. With BodyCraft® fitness equipment, the focus is on what sport is all about: maximum performance! Therefore, the equipment is developed in close consultation with athletes and sports scientists. Because athletes know best what makes perfect fitness equipment.

Further information can be found at www.sport-tiedje.com.

Intended Use

The equipment may only be used for its intended purpose.

The equipment is only suitable for home use. The equipment is not suitable for semi-professional (e.g. hospitals, associations, hotels, schools, etc.) and commercial or professional use (e.g. fitness studios).

Legal Notice

Sport-Tiedje GmbH
Europe's No. 1 for home fitness

International Headquarters
Flensburger Straße 55
24837 Schleswig
Germany

Management:
Christian Grau
Sebastian Campmann
Dr. Bernhard Schenkel

No. HRB 1000 SL
Local Court Flensburg
European VAT Number: DE813211547

Disclaimer

©2011 BodyCraft® is a registered brand of the company SportTiedje GmbH. All rights reserved. Any use of this trademark without the explicit written permission of Sport-Tiedje is prohibited.

Product and manual are subject to change. Technical data can be changed without advance notice.

ABOUT THIS MANUAL

Please carefully read the entire manual before installation and first use. The manual will help you to quickly set up the system and explains how to safely use it. Make sure that all persons exercising with the equipment (especially children and persons with physical, sensory, mental or motor disabilities) are informed about this manual and its contents in advance. In case of doubt, responsible persons must supervise the use of the equipment.

This equipment has been manufactured according to the latest safety knowledge. As far as possible, potential safety hazards which could cause injury have been eliminated. Make sure to carefully follow the instructions and that all parts are securely in place. If required, read through the instructions again to correct any mistakes.

Please pay close attention to the safety and maintenance instructions given here. The contract partner cannot be held liable for damage to health, accidents or damage to the equipment when it is not used in accordance with these instructions.

The following safety instructions may appear in this manual:

► **ATTENTION**
This notice indicates potentially hazardous situations which, if not avoided, may result in property damage.

⚠ **CAUTION**
This notice indicates potentially hazardous situations which, if not avoided, may result in slight or minor injuries!

⚠ **WARNING**
This notice indicates potentially hazardous situations which, if not avoided, may result in death or serious injuries!

⚠ **DANGER**
This notice indicates potentially hazardous situations which, if not avoided, will result in death or serious injuries!

ⓘ **NOTICE**
This notice indicates further useful information.

Retain these instructions in a safe place for future reference, maintenance or when ordering replacement parts.

1.1 Technical Data

Weight and Dimensions:
Article weight (gross, incl. packaging): 42.5 kg
Article weight (net, without packaging): 38.5 kg

Packed dimensions boxes (L x W x H): 296.4 cm x 53.3 cm x 20.1 cm
Set-up dimensions (L x W x H): approx. 144.5 cm x 67.1 cm x 21 cm

Maximum load (top plate) in kg: 120 kg

Maximum user weight: 150 kg

1.2 Personal Safety

⚠ DANGER

+ Before you start using the equipment, you should consult your physician that this type of exercise is suitable for you from a health perspective. Particularly affected are persons who: have a hereditary disposition to high blood pressure or heart disease, are over the age of 45, smoke, have high cholesterol values, are overweight and/or have not exercised regularly in the past year. If you are under medical treatment that affects your heart rate, medical advice is absolutely essential.
+ Note that excessive training can seriously endanger your health. Please also note that heart rate monitoring systems can be inaccurate. If you notice any signs of weakness, nausea, dizziness, pain, shortness of breath, or other abnormal symptoms, stop exercising immediately and seek advice from your doctor if necessary.

⚠ WARNING

+ This equipment may not be used by children under the age of 14.
+ Children should not be allowed unsupervised access to the equipment.
+ Persons with disabilities must have a medical license and must be under strict observation when using the equipment.
+ The equipment is strictly for use by one person at a time.
+ If your equipment provides a safety key, the clip of the safety key must be attached to your clothing before starting your training. In the event of a fall, the EMERGENCY STOP of the equipment can be initiated.
+ Keep your hands, feet and other body parts, hair, clothing, jewellery and other objects well clear of moving parts.
+ During use, wear suitable sports clothing rather than loose or baggy clothing. When wearing sports shoes, make sure they have suitable soles, preferably made of rubber or other non-slip materials. Shoes with heels, leather soles, studs or spikes are unsuitable. Never exercise barefoot.

⚠ CAUTION

+ If your equipment needs to be connected to the power supply with a mains cable, make sure that the cable is not a potential tripping hazard.
+ Make sure that nobody is within the range of motion of the equipment during training so as not to endanger you or other persons.

► ATTENTION

+ Do not insert any objects of any kind into the openings of the device.

1.3 Set-Up Place

⚠ **WARNING**

+ Do not place the equipment in main corridors or escape routes.

⚠ **CAUTION**

+ The training room should be well ventilated during training and not be exposed to any draughts.
+ Choose the place in which to set up the equipment such that there is enough free space/ clearance to the front, the rear and to the sides of the equipment.
+ The set-up and mounting surface of the equipment should be flat, loadable and solid.

► **ATTENTION**

+ The device may only be used in one building, in sufficiently tempered and dry rooms (ambient temperatures between 10°C and 35°C). The equipment should not be used outdoors or in rooms with high humidity (over 70%) like swimming pools.
+ A floor protective mat/equipment underlay can help to protect high-quality floor coverings (parquet, laminate, cork, carpets) from dents and sweat and can help to level out slight unevenness.

2.1 General Instructions

DANGER

+ Do not leave any tools, packaging materials such as foils or small parts lying around, as otherwise there is a danger of suffocation for children. Keep children away from the equipment during assembly.

WARNING

+ Pay attention to the instructions attached to the equipment in order to reduce the risk of injuries.

CAUTION

+ Do not open the packaging when it is lying on its side.
+ Ensure to have sufficient room for movement in each direction during assembly.
+ The assembly of the equipment must be carried out by at least two adults. If in doubt, seek the help of a third technically skilled person.

ATTENTION

+ To prevent damage to the equipment and the floor, assemble the equipment on a mat or packaging board.

NOTICE

+ In order to make the assembly as simple as possible, some screws and nuts to be used can already be pre-assembled.
+ Ideally, assemble the equipment at its later set-up place.

2.2 Scope of Delivery

The scope of delivery consist of the following parts. At the beginning, check whether all parts and tools belonging to the device are included in the scope of delivery and whether damage has occurred. In the event of complaints, the contractual partner must be contacted directly.

⚠ **CAUTION**
If parts of the scope of delivery are missing or damaged, the assembly must not be carried out.

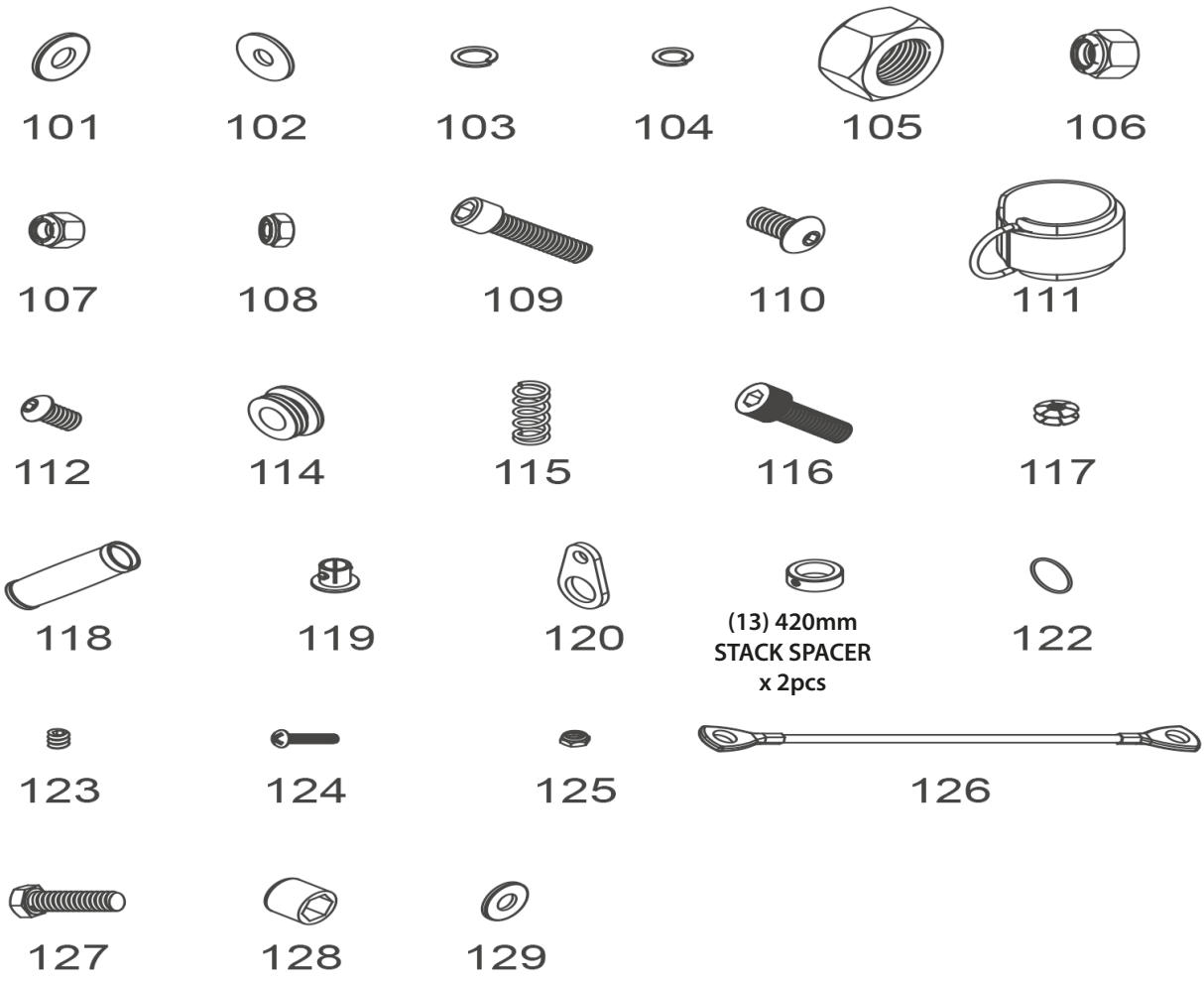

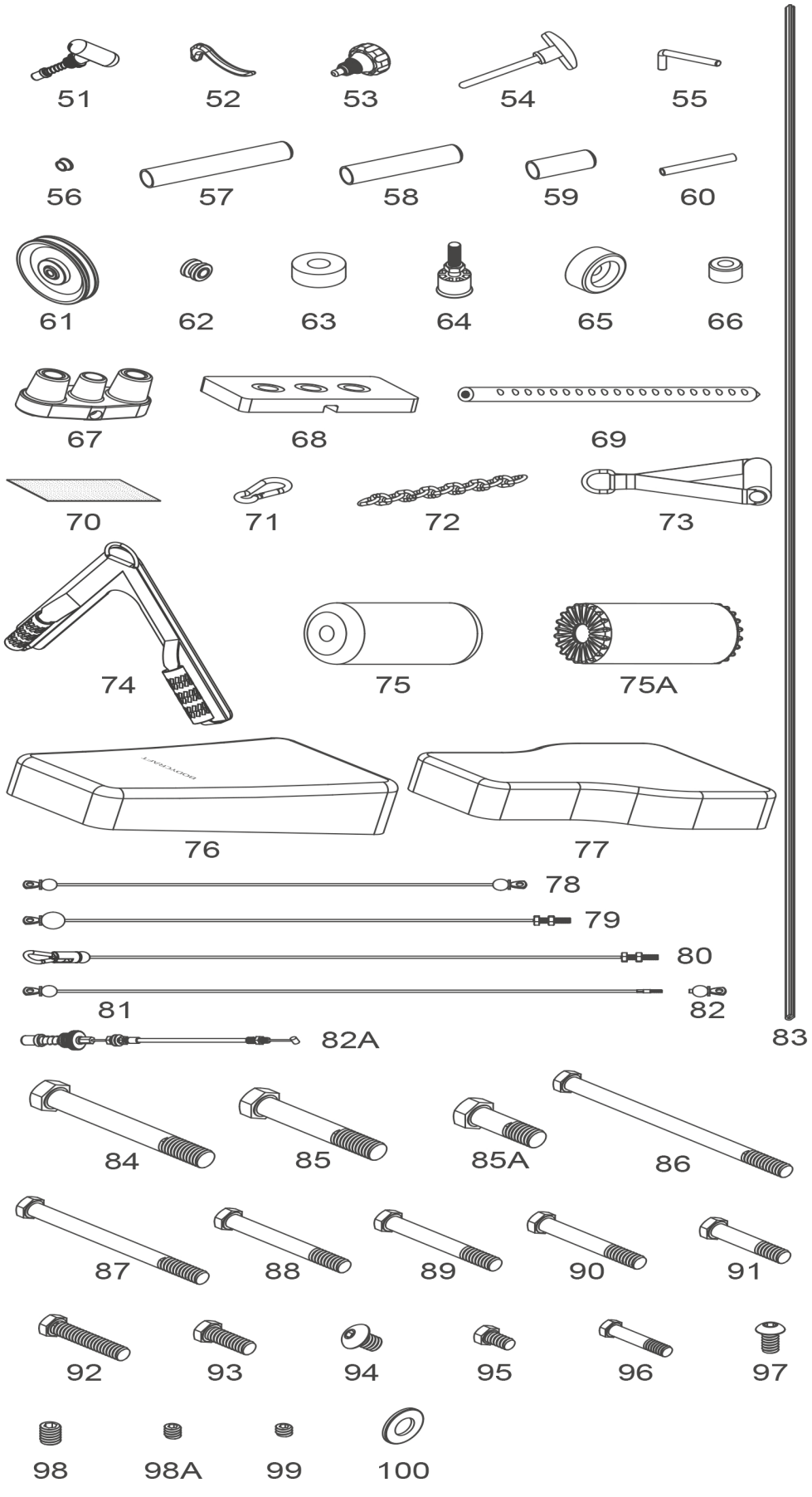
51
52
53
54
55
56
57
58
59
60
61
62
63
64
65
66
67
68
69
70
71
72
73
74
75
75A
76
77
78
79
80
81
82
82A
83
84
85
85A
86
87
88
89
90
91
92
93
94
95
96
97
98
98A
99
100

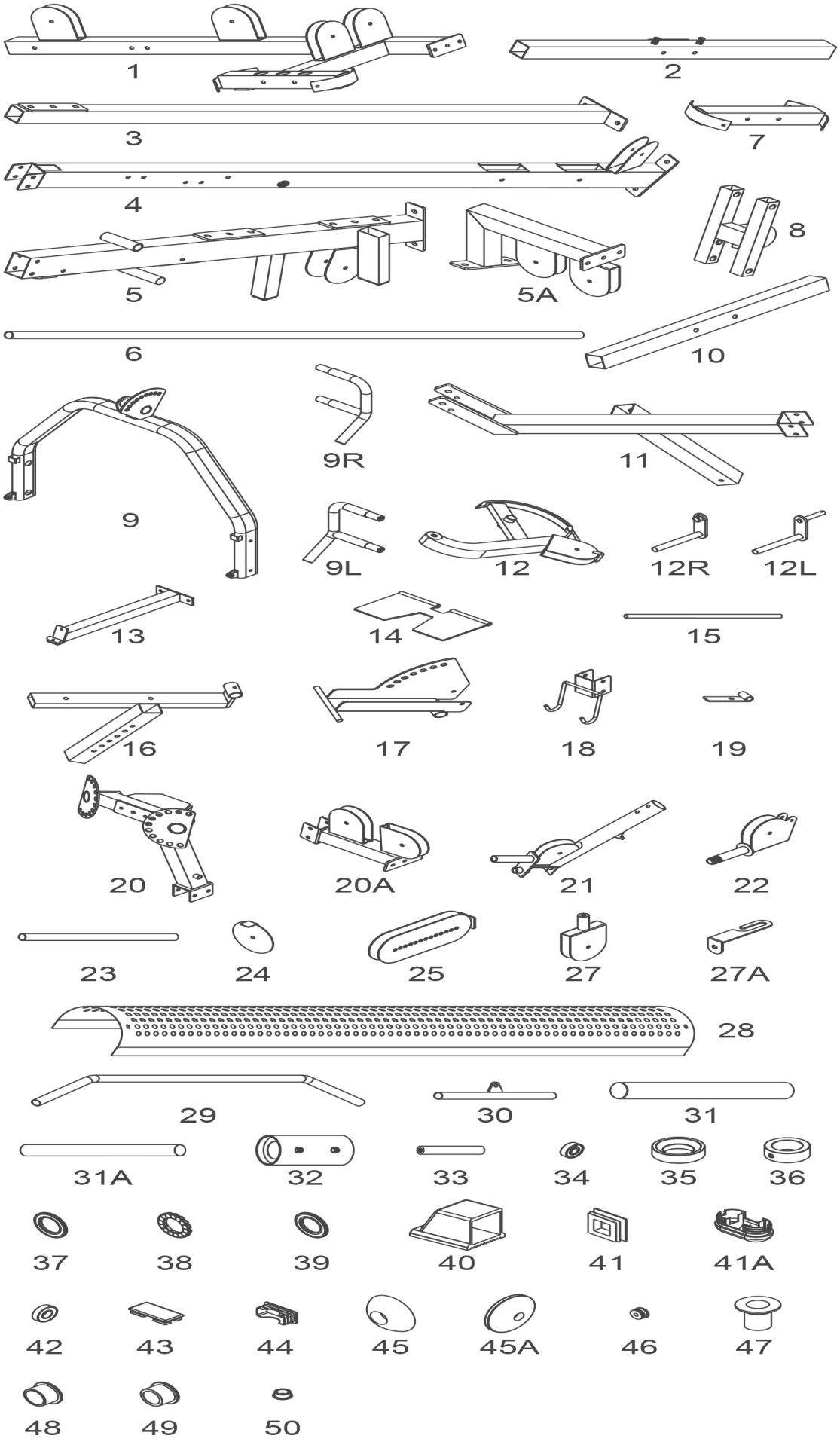
1
2
3
7
4
8
5
5A
6
10
9R
11
9
9L
12
12R
12L
13
14
15
16
17
18
19
20
20A
21
22
23
24
25
27
27A
28
29
30
31
31A
32
33
34
35
36
37
38
39
40
41
41A
42
43
44
45
45A
46
47
48
49
50

2.3 Assembly

Before assembly, take a close look at the individual assembly steps shown and carry out the assembly in the order given.

ⓘ **NOTICE**
First loosely screw all parts together and check that they fit properly. Tighten the screws using the tool only when you are instructed to do so.

Step 1: Assemble base frame

1. Attach four 50x50mm endcaps (19) to both ends of the front stabilizer (2) and the rear stabilizer (3) as shown.
2. Mount the foot plate (9) to the front stabilizer using the foot plate holder (14) and a 5/16"X 1/4"inner hex screw (61).
3. Mount the front stabilizer (2) to the base frame (1) using two 3/8" X 2-3/4" hex bolts (55), four 3/8" washers (63) and two 3/8" nylon nuts (66).
4. Mount the rear stabilizer (3) to the base frame (1) using two 3/8" X 3-1/8" hex bolts (53), four 3/8" washers (63) and two 3/8" nylon nuts (66).
5. Insert the two guide rod holders (24) completely into the rear stabilizer (3) as shown.
6. Insert both guide rods (6) into the 420mm spacer (13) and the guide rod holders (24) and mount them using two 3/8" X 1" hex threaded bolts (57) and two 3/8" spring washers (65).

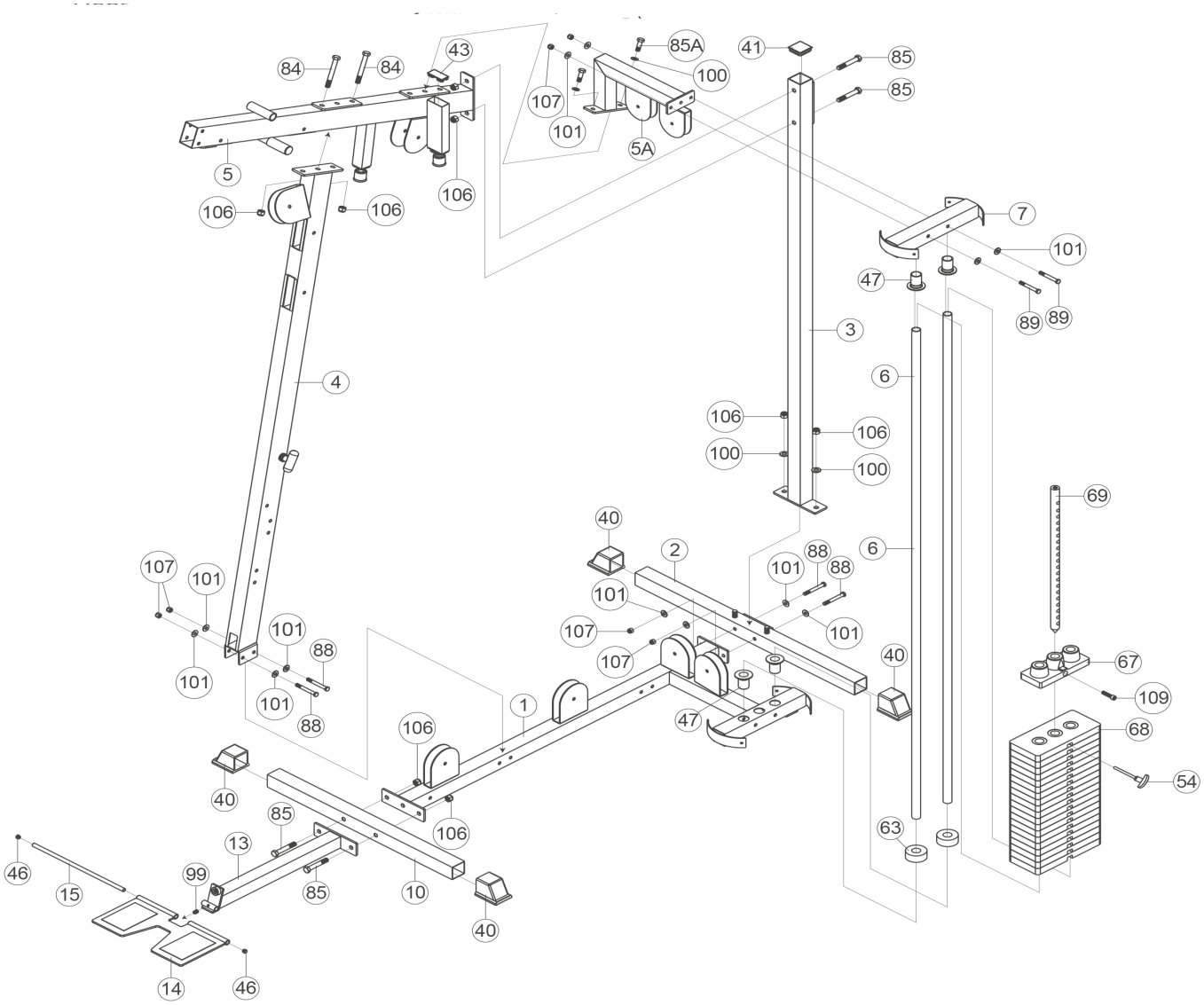

84
84
43
85A
41
85
85
100
107
101
5A
5
106
106
106
7
101
47
89
89
3
6
4
106
106
100
100
69
40
2
6
88
101
88
101
107
101
101
107
101
88
107
40
67
101
101
88
1
47
109
106
68
40
54
85
106
63
13
46
99
85
10
15
40
14
46

Step 2: Assemble upright frame

1. Mount the upright frame (5) to the base frame (1) using two 3/8"X 3" hex bolts (54), four 3/8" washers (63) and two 3/8" nylon nuts (66).
2. Mount the connector plate (11) to the upright frame (5) using two 3/8" X 3-1/8" hex bolts (53), four 3/8" washers (63) and two 3/8" nylon nuts (66).
3. Shove the two rubber donuts (25) and the top plate (10) over the guide rods (6).

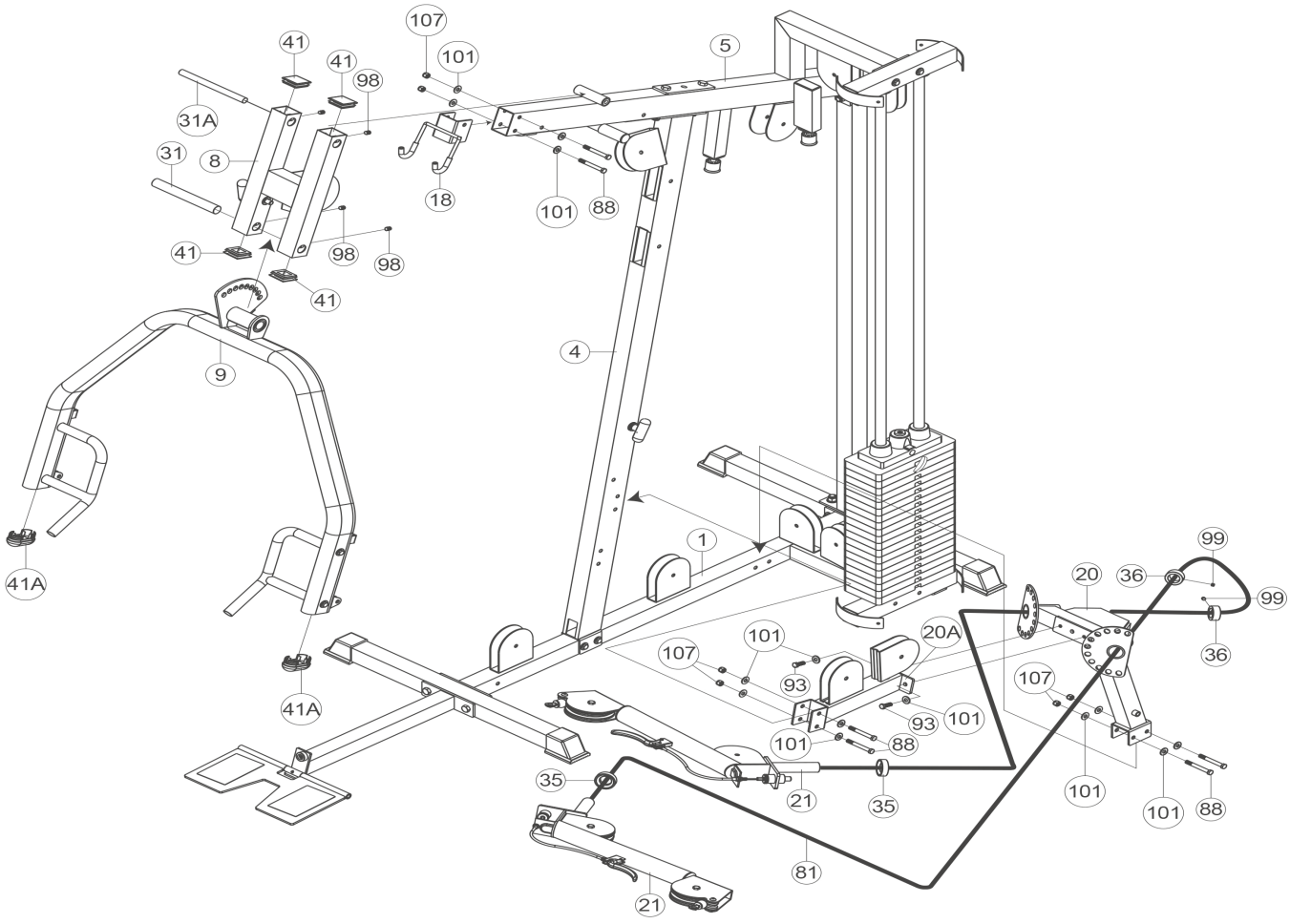

Step 3: Assemble top frame

1. Attach two 50x75mm endcaps (20) to the top frame (4).
2. Attach two 50x50mm caps (21) to the top frame (4).
3. Shove the adjuster frame (7) over the upright frame (5).
4. Mount the top frame (4) to the upright frame (5) using two 3/8"X 3" hex bolts (54), four 3/8" washers (63) and two 3/8" nylon nuts (65).
5. Mount the seat pad (15) to the seat adjuster frame (8) using two 3/8"X 1" hex threaded bolts (57) and two 3/8" washers (63).
6. Mount the seat adjuster frame (8) to the base frame (1).

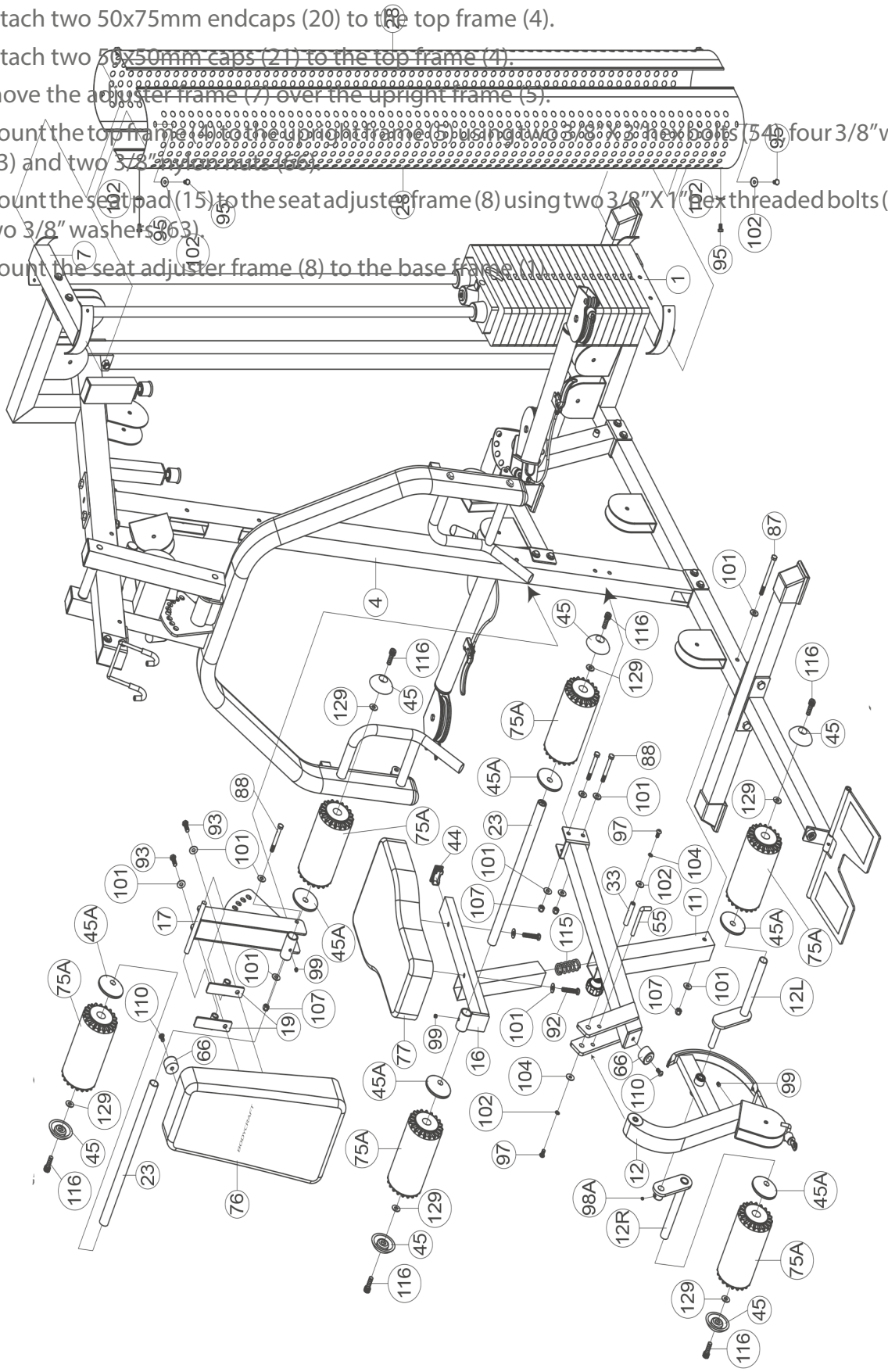

Step 4: Assemble foam pad

1. Shove the two plastic covers (26) and the two foam pads (16) over the adjuster frame (7).
2. Mount the foam pads (16) to the adjuster frame (7) using two 5/16" X 1-1/4 set screws (59), two plastic washers (27) and two 5/16" large washers (64).
3. Shove the two rubber donuts (25) and the two olympic sleeves (52) over the top plate (10) and mount the olympic sleeves (52) using two 5/16" X 3/8 inner hex screws (60).

NOTICE
Use the spring collars (48 or 49) to fix weight on the top plate (10) after the entire assembly.

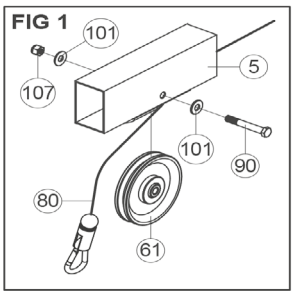
FIG 1
101
107
5
101
90
80
61

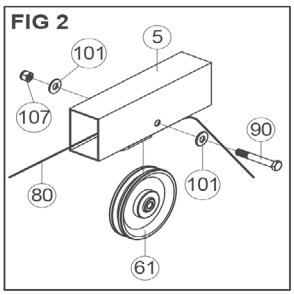
FIG 2
5
101
107
90
101
80
61

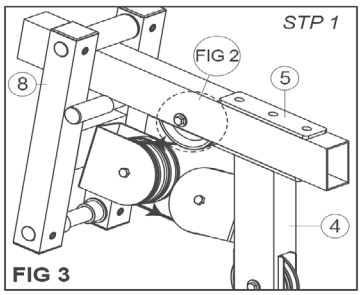
STP 1
FIG 2
8
5
4
FIG 3

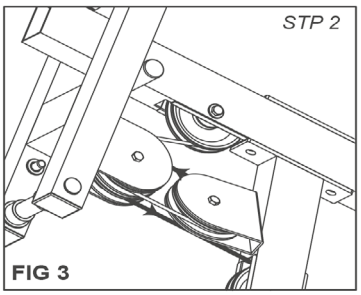
STP 2
FIG 3

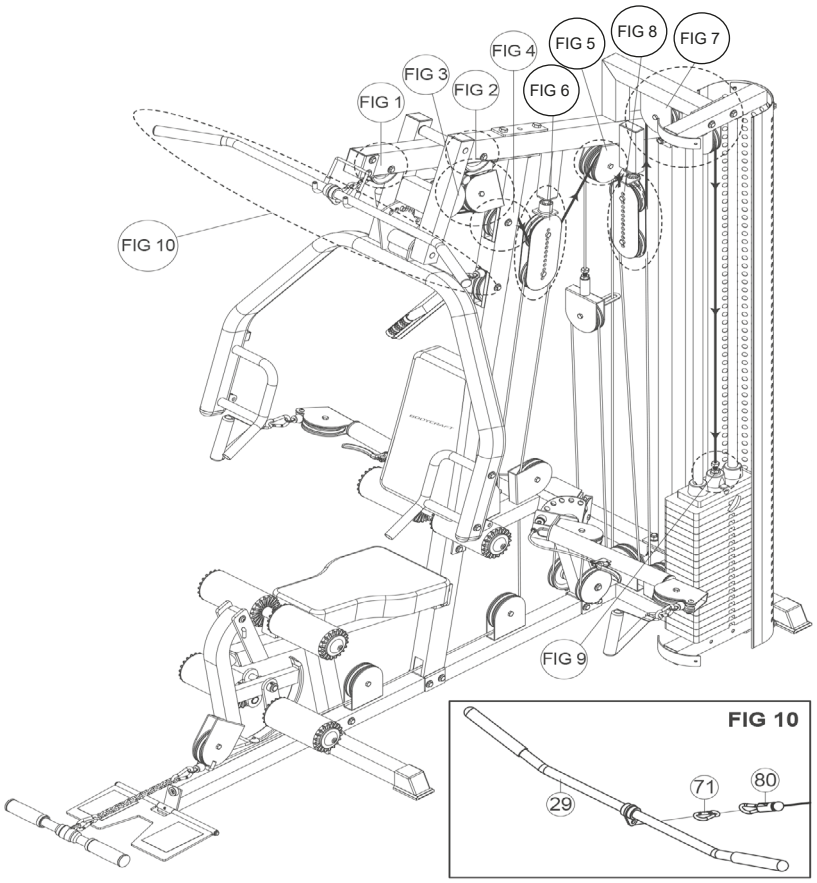
FIG 1
FIG 2
FIG 3
FIG 4
FIG 5
FIG 6
FIG 7
FIG 8
FIG 9
FIG 10

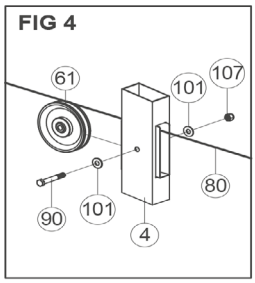
FIG 4
61
101
107
80
90
101
4

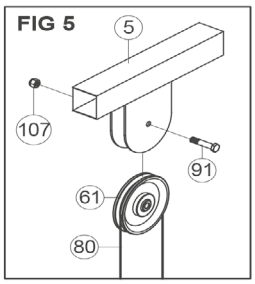
FIG 5
5
107
91
61
80

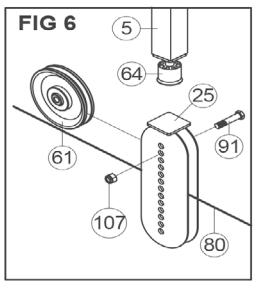
FIG 6
5
64
25
91
61
107
80

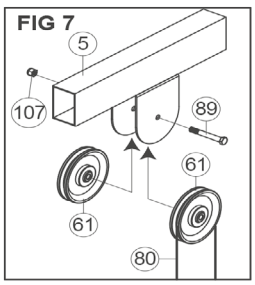
FIG 7
5
107
89
61
61
80

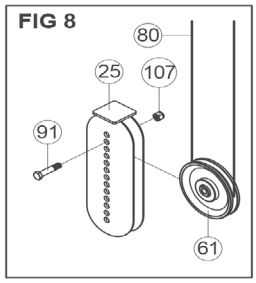
FIG 8
80
25
107
91
61

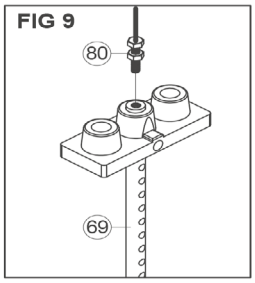
FIG 9
80
69

FIG 10
71
80
29

Step 5: Assemble top cable

1. Insert the ball end of the top cable (32) into the front of the top frame (4) and fix the cable using a pulley (18), see T1.
2. Mount the pulley (18) using two spacers (29), two 3/8" washers (63), one 3/8" X 2-3/4" hex bolt (55) and one 3/8" nylon nut (66), see T1.
3. Guide the cable (32) trough the top frame (4) over a pulley (18) and mount the pulley (18) using two spacers (29), two 3/8" washers (63), one 3/8" X 2-3/4" hex bolt (55) and one 3/8" nylon nut (66), see T2.
4. Mount a pulley (18) to the adjustable pulley block (12) using a 3/8" X 1-3/4" hex bolt (56) and a 3/8" nylon nut (66) and guide the cable (32) along underneath the pulley (18), see T3.
5. Guide the cable (32) upwards through the top frame (4) and fix the cable using a pulley (18), see T4.
6. Mount the pulley (18) using two spacers (29), two 3/8" washers (63), one 3/8" X 2-3/4" hex bolt (55) and one 3/8" nylon nut (66), see T4.
7. Guide the cable (32) downwards and screw the bolt end of the cable into the top plate (10), see T5.

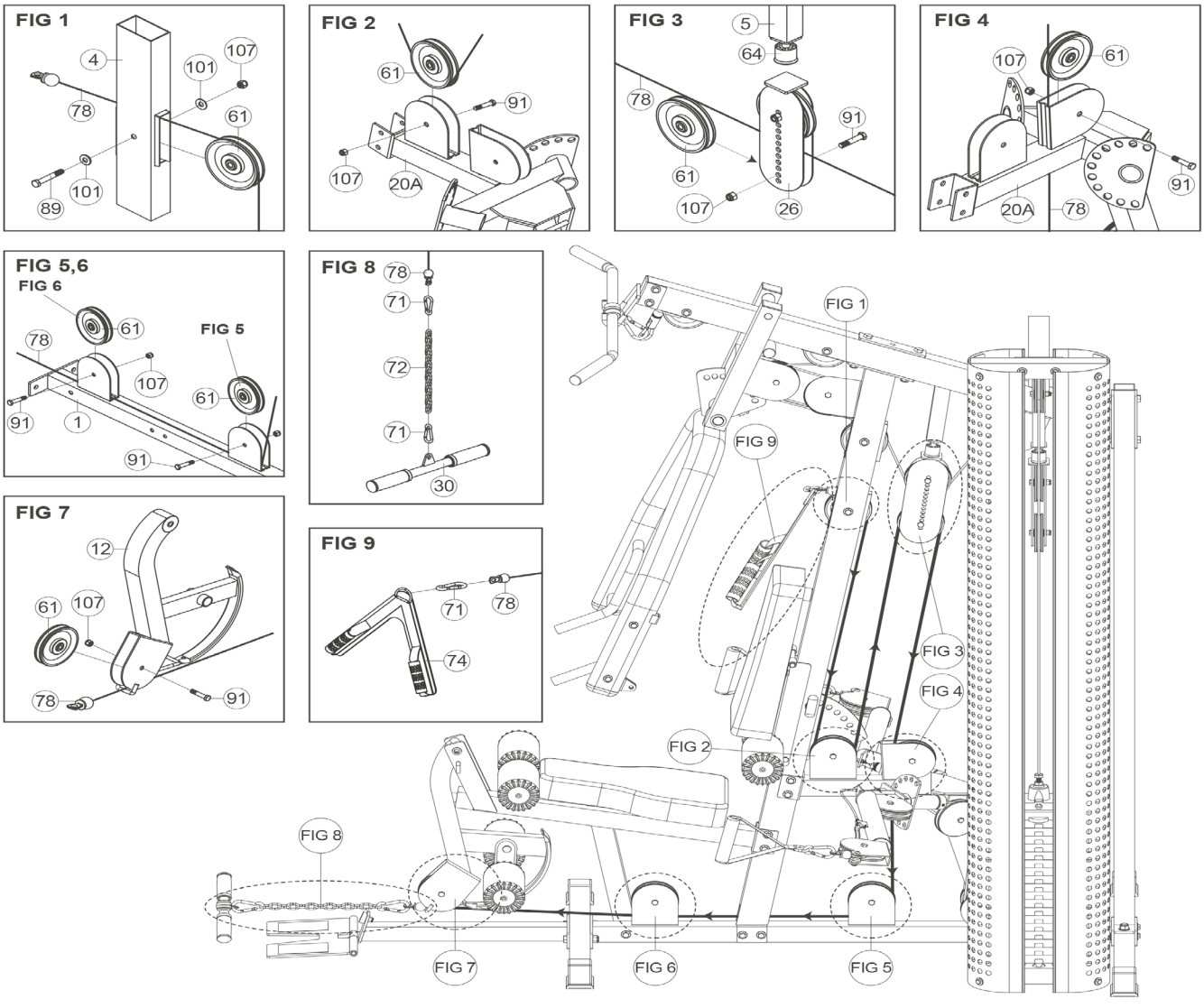

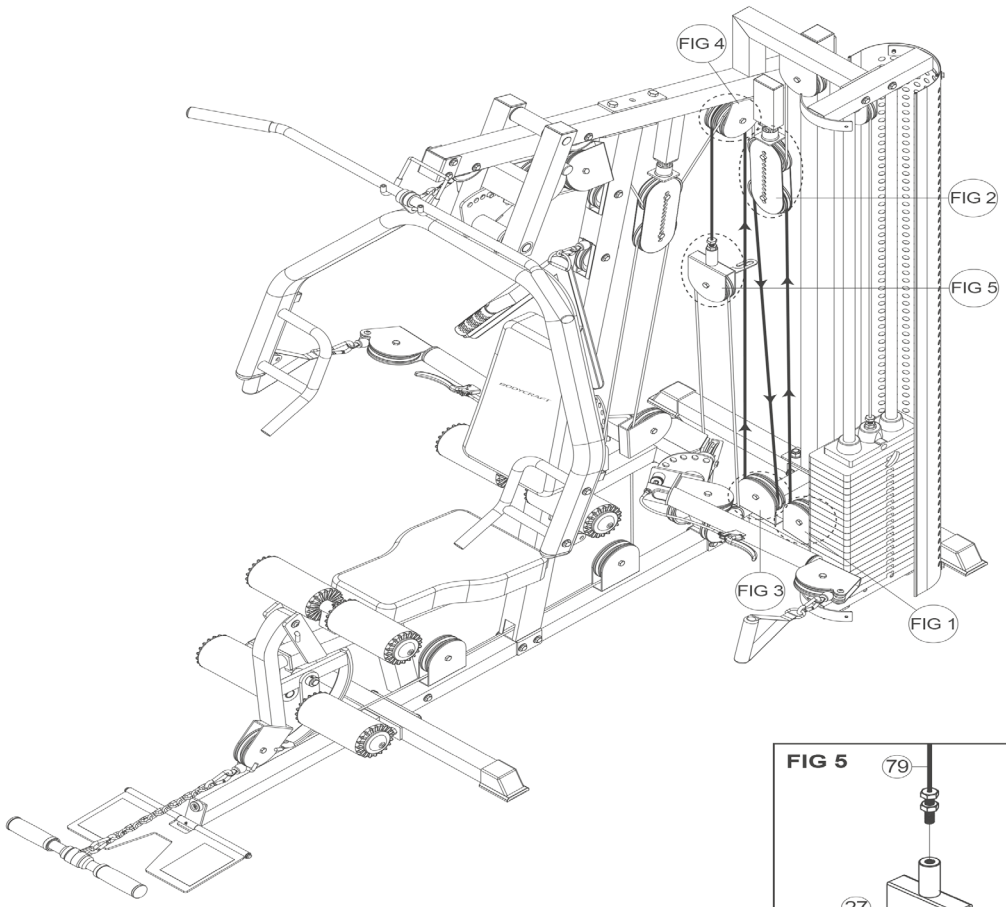
FIG 4
FIG 2
FIG 5
FIG 3
FIG 1

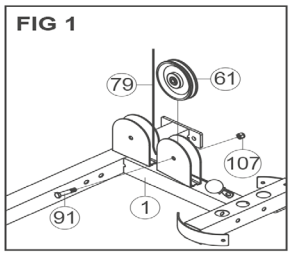
FIG 1
79
61
107
91
1

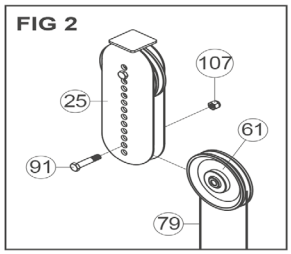
FIG 2
107
25
61
91
79

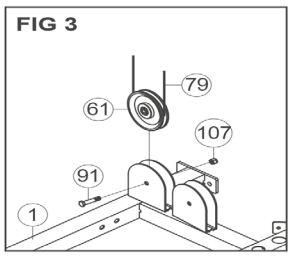
FIG 3
79
61
107
91
1

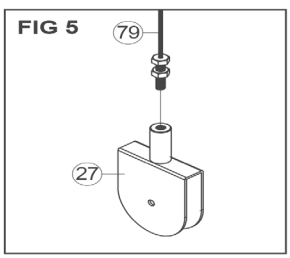
FIG 5
79
27

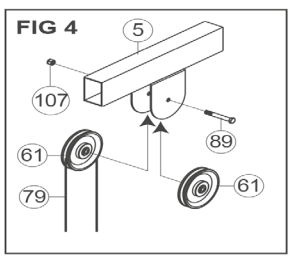
FIG 4
5
107
89
61
79
61

Step 6: Assemble lower cable

1. Insert the ball end of the lower cable (33) into the front of the base frame (1) and fix the cable using a pulley (18), see L1.
2. Mount the pulley (18) using a 3/8" X 1-3/4" hex bolt (56) and a 3/8" nylon nut (66), see L1.
3. Guide the cable (33) along the base frame (1) and fix the cable using another pulley (18), see L2.
4. Mount the pulley (18) using a 3/8" X 1-3/4" hex bolt (56) and a 3/8" nylon nut (66), see L2.
5. Guide the cable (33) over a pulley (18) and mount the pulley to the adjustable pulley block (12) using a 3/8" X 1-3/4" hex bolt (56) and a 3/8" nylon nut (66), see L3.
6. Guide the cable (33) downwards and connect the eyelet end of the cable to the connector plate (11), that is mounted to the upright frame (5), using a 8mm snap hook, see L4.

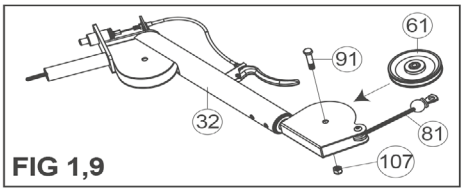

FIG 1,9

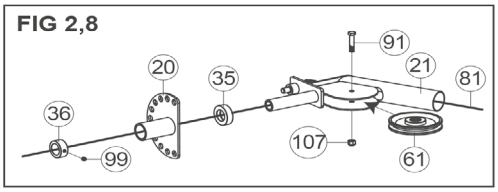

FIG 2,8

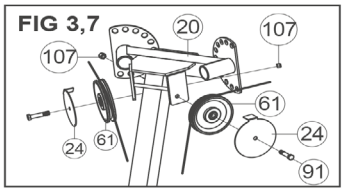

FIG 3,7

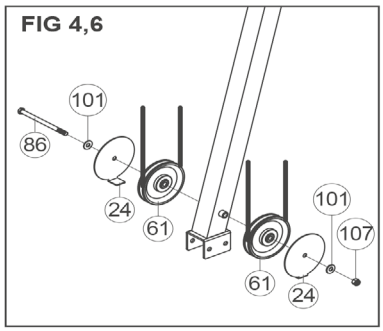

FIG 4,6

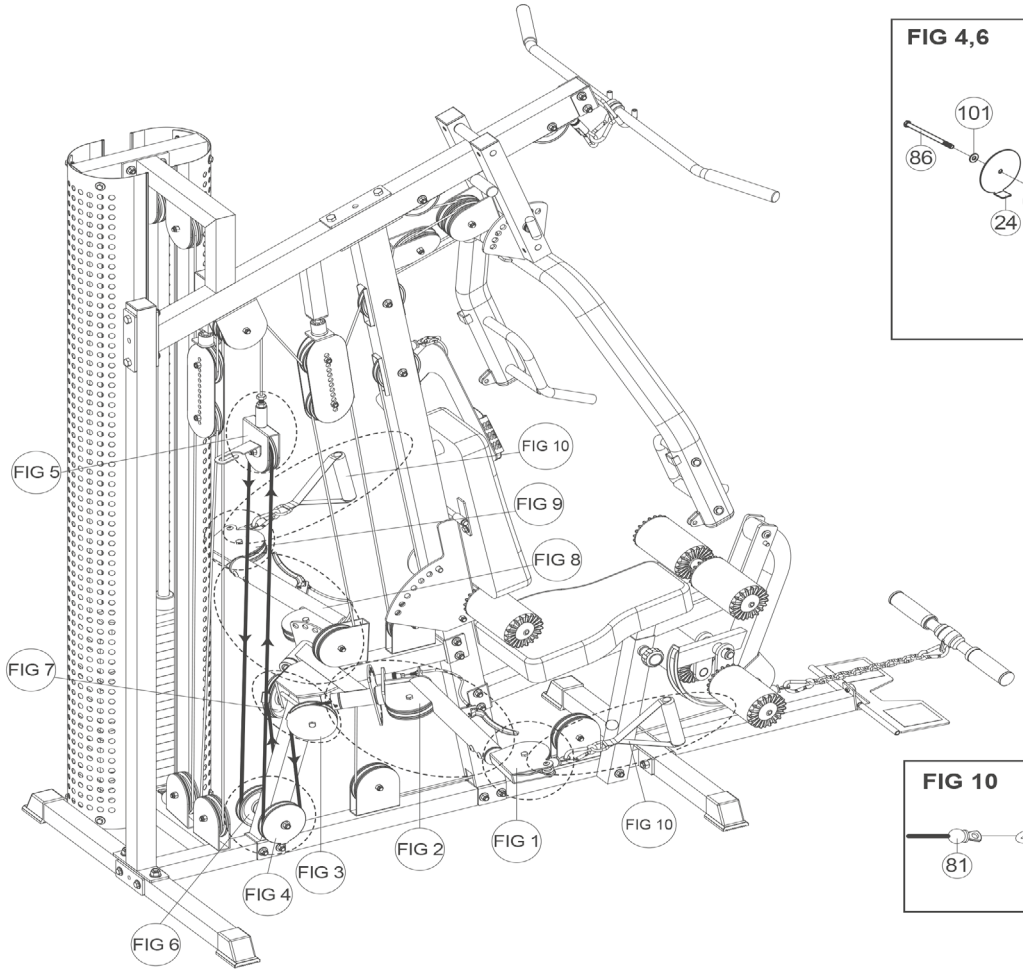

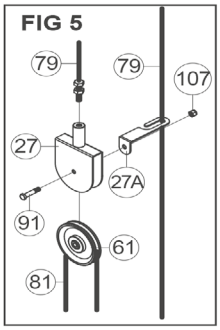

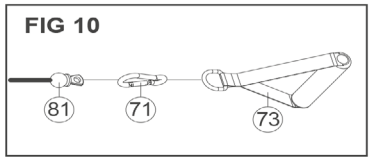

3.1 General Instructions

► **ATTENTION**

+ Make sure that the equipment is protected from moisture, dust and dirt in the selected storage location. The storage location should be dry and well ventilated and have a constant ambient temperature between 5°C and 45°C.

⚠ **WARNING**

+ The storage location should be chosen so that improper use by third parties or children can be prevented.
+ If your equipment does not have transportation wheels, the equipment must be disassembled before transportation.

4.1 General Instructions

⚠ **WARNING**

+ Do not make any improper changes to the equipment.

⚠ **CAUTION**

+ Damaged or worn components may affect your safety and the life of the equipment. Therefore, immediately replace damaged or worn components. In such a case, contact the contract partner. The equipment must not be used until it has been repaired. If necessary, use only original spare parts.

► **ATTENTION**

+ In addition to the instructions and recommendations for maintenance and care given here, additional service and/or repair work may be necessary; this must only be carried out by authorised service technicians.

4.2 Faults and Fault Diagnosis

The equipment undergoes regular quality controls during production. Nevertheless, faults or malfunctions may occur. Frequently, individual parts are responsible for these disturbances, an exchange is usually sufficient. Please refer to the following overview for the most common errors and how to correct them. If the equipment still does not function properly, contact your contract partner.

Fault	Cause	Solution
Grinding noise	Cables or pulleys do not run clean or are damaged	Visual inspection of the cable run or pulley bearing
Weight is hanging in the air	Cable too tensioned.	Readjust cable tension
Cable without tension.	Cable too loose	Readjust cable tension
Squeaking & cracking noises	Loose or too tight bolt connection	Check or lubricate bolt connection

4.3 Maintenance and Inspection Calendar

To avoid damage from body sweat, the equipment must be cleaned with a damp towel (no solvents!) after each training session.

The following routine tasks must be performed at the specified intervals:

Part	Weekly	Monthly	Quarterly	Half-yearly	Yearly
Cables and pulleys	C/I				
Bolt connections		I			
Pulleys and cables	I				
C = clean; I = inspect					

5 DISPOSAL

At the end of its operational life, this equipment cannot be disposed of in normal household waste. Instead, it must be disposed of via an electricals recycling centre. Further information can be obtained from your local authority's recycling service.

The materials can be recycled as per their symbols. Through the reuse, recycling of materials or other forms of recovery of old equipment, you make an important contribution to the protection of the environment.

6 RECOMMENDED ACCESSORIES

To make your training experience even more efficient and pleasant, we recommend that you add suiting accessories to your fitness equipment. This could be a **floor mat**, for example, which makes your fitness equipment stand more securely and also protects the floor from falling sweat, but it could also be additional handrails on some treadmills or **silicone spray** to keep moving parts in good shape.

If you have purchased a fitness machine with pulse training and want to train your heart rate, we strongly recommend that you use a compatible chest strap, as this ensures optimum transmission of the heart rate. You may want to buy additional **grips** or **weights** for multi gyms.

Our range of accessories offers the highest quality and makes training even better. If you would like to find out more about compatible accessories, please go to the detail page of the product in our webshop (the easiest way is to enter the article number in the search field above) and go to the recommended accessories on this page. Alternatively, you can use the QR code provided. Of course, you can also contact our customer service: by telephone, e-mail, in one of our branches or via our social media channels. We will be happy to advise you!

floor mat

chest strap

chest strap contact gel

silicone spray

towels

7.1 Serial Number and Model Name

In order to provide you with the best possible service, please have the model name, article number, serial number, exploded drawing and parts list ready. The corresponding contact options can be found in chapter 9 of this operating manual.

ⓘ **NOTICE**
The serial number of your equipment is unique. It's located on a white sticker. The exact position of this sticker is shown in the following illustration.

Enter the serial number in the appropriate field.

Serial number:

Brand / Category:

BodyCraft / multi gym

Model Name:

LPT

Article Number:

BC-LPT

7.2 Parts List

No.	Name	Qty.
1	BASE FRAME	1
2	REAR STABILIZER	1
3	REAR UPRIGHT	1
4	FRONT UPRIGHT	1
5	TOP FRAME - bearing pre-installed	1
5A	TOP FRAME CONNECTOR	1
6	GUIDE ROD	2
7	TOP GUIDE ROD RETAINER	1
8	PRESS ARM SELECTOR	1
9	PRESS ARM	1
9R	RIGHT HANDLE OF PRESS ARM	1
9L	LEFT HANDLE OF PRESS ARM	1
10	FRONT STABILIZER	1
11	SEAT FRAME	1
12	LEG EXTENSION ARM - bearing pre-installed	1
12R	RIGHT LEG EXTENSION ARM	1
12L	LEFT LEG EXTENSION ARM	1
13	LOW ROW CONNECTOR	1
14	FOOT PLATE	1
15	FOOT PLATE ROLLER	1
16	CHROME SEAT ADJUSTER	1
17	SEAT BACK ADJUSTER	1
18	LAT BAR HOLDER	1
19	METAL HINGE	2
20	CABLE ARM ASSEMBLY	1
20A	CABLE ARM CONNECTOR	1
21	CABLE ARM	2
22	SWIVEL CABLE TOP	2
23	FOAM ROLLER BAR	2
24	PULLEY GUIDE BRACKET	4
25	ADJUSTABLE PULLEY BLOCK	2

27	SINGLE PULLEY BLOCK	1
27A	CABLE GUIDE PLATE	1
28	WEIGHT SHROUD	2
29	LAT BAR	1
30	LOW ROW BAR	1
31	PIVOT AXLE	1
31A	19.92mm AXLE	1
32	CABLE ARM COLLAR	2
33	LEG EXTENSION AXLE	1
34	608ZB BEARING	4
35	STEEL SPACER	2
36	AXLE COLLAR	2
37	BEARING BASIN	4
38	BEARING	4
39	BEARING COVER	4
40	50mm SQ. CAP	4
41	50mm SQ. PLUG	5
41A	40 X 80mm ELLIPTIC PLUG	2
42	37mm OD. BEARING	2
43	30 X 60mm RECT. PLUG	1
44	25 X 50mm RECT. PLUG	1
45	PLASTIC COVER	6
45A	PLASTIC WASHER	6
46	1/2" ROUND PLUG	2
47	PLASTIC GUIDE ROD HOLDER	4
48	1" STEEL BUSHING	2
49	28.6mm STEEL BUSHING	4
50	1/2" X 1-1/8" BEARING	2
51	RED POP PIN	2
52	CLUTCH LEVER OF CABLE ARM	2
53	SPRING KNOB	1
54	MAGMETIC SELECTOR PIN	1
55	L PIN	1
56	3/4" BUSHING	2

57	1" X 200mm HAND GRIP	2
58	1" X 140mm HAND GRIP	2
59	1" X 70mm PRESS ARM STOPPER	2
60	GRIP OF LAT BAR HOLDER (95mm)	2
61	BIG PULLEY	31
62	SMALL PULLEY OF SWIVEL ARM	2
63	RUBBER DONUT	2
64	ADJUSTABLE STOPPER	2
65	1/2" STOPPER	1
66	BACK BRACKET STOPPER	2
67	TOP PLATE	1
68	10 LB. PLATE	19
69	SELECTOR ROD	1
70	NON SLIP	4
71	SNAP HOOK	6
72	LOW ROW CHAIN	1
73	HAND GRIP OF CABLE ARM	2
74	NEW AB CRUNCH	1
75	FOAM PAD WITH VINYL COVER	6
75A	COVER OF FOAM PAD	6
76	BACK PAD	1
77	SEAT PAD	1
78	AB CRUNCH CABLE	1
79	CABLE ARM CONNECTING CABLE	1
80	TOP CABLE	1
81	CABLE ARM CABLE	1
82	HEAD OF CABLE ARM CABLE	1
82A	CLUTCH CABLE	2
83	BINDING OF WEIGHT SHROUD	4
84	1/2" X 4" HEX HEAD BOLT	2
85	1/2" X 3" HEX HEAD BOLT	4
85A	1/2" X 1-1/4" HEX HEAD BOLT	2
86	3/8" X 5-3/4" HEX HEAD BOLT	1
87	3/8" X 4-1/2" HEX HEAD BOLT	1

88	3/8" X 3" HEX HEAD BOLT	13
89	3/8" X 2-3/4" HEX HEAD BOLT	4
90	3/8" X 2-1/2" HEX HEAD BOLT	4
91	3/8" X 1-3/4" HEX HEAD BOLT	21
92	3/8" X 1-3/4" HEX HEAD BOLT (ALL)	2
93	3/8" X 1" HEX HEAD BOLT (ALL)	6
94	3/8" X 1/2" ROUND BOLT	4
95	5/16" X 1/2" HEX HEAD BOLT (ALL)	8
96	5/16" X 1-1/2" HEX BOLT	2
97	5/16" X 5/8" INNER HEX SCREW	3
98	3/8" X 5/8" SET SCREW	4
98A	5/16" X 1/2" SET SCREW	1
99	5/16" X 1/4" SET SCREW	5
100	1/2" WASHER	4
101	3/8" WASHER	58
102	5/16" SMALLER WASHER	10
103	3/8" SPRING WASHER	4
104	5/16" SPRING WASHER	2
105	24mm NYLON NUT	2
106	1/2" NYLON NUT	8
107	3/8" NYLON NUT	46
108	5/16" NYLON NUT	3
109	TOP PLATE BOLT	1
110	3/8" X 3/4" INNER HEX SCREW	2
111	ANKLE STRAP	1
112	3/8" X 1" INNER HEX SCREW	4
114	1" PLUG	2
115	SPRING	1
116	5/16" X 1-1/4" SUNKEN HEAD SCREW	6
117	5/16" NUT	6
118	1-1/4" HAND GRIP	2
119	1" T SHAPE END PLUG	2
120	HOOK PLATE	1
121	COLLAR	2

122	SEALING RING	2
123	M6 SET SCREW	2
124	M5 X 18mm ROUND HEAD SCREW	2
125	M5 NYLON NUT	2
126	CONNECT CABLE	2
127	3/8" X 1-1/4" HEX BOLT	2
128	CAP FOR 3/8" NUT	4
129	5/16" LARGER WWASHER	6

7.3 Exploded Drawing

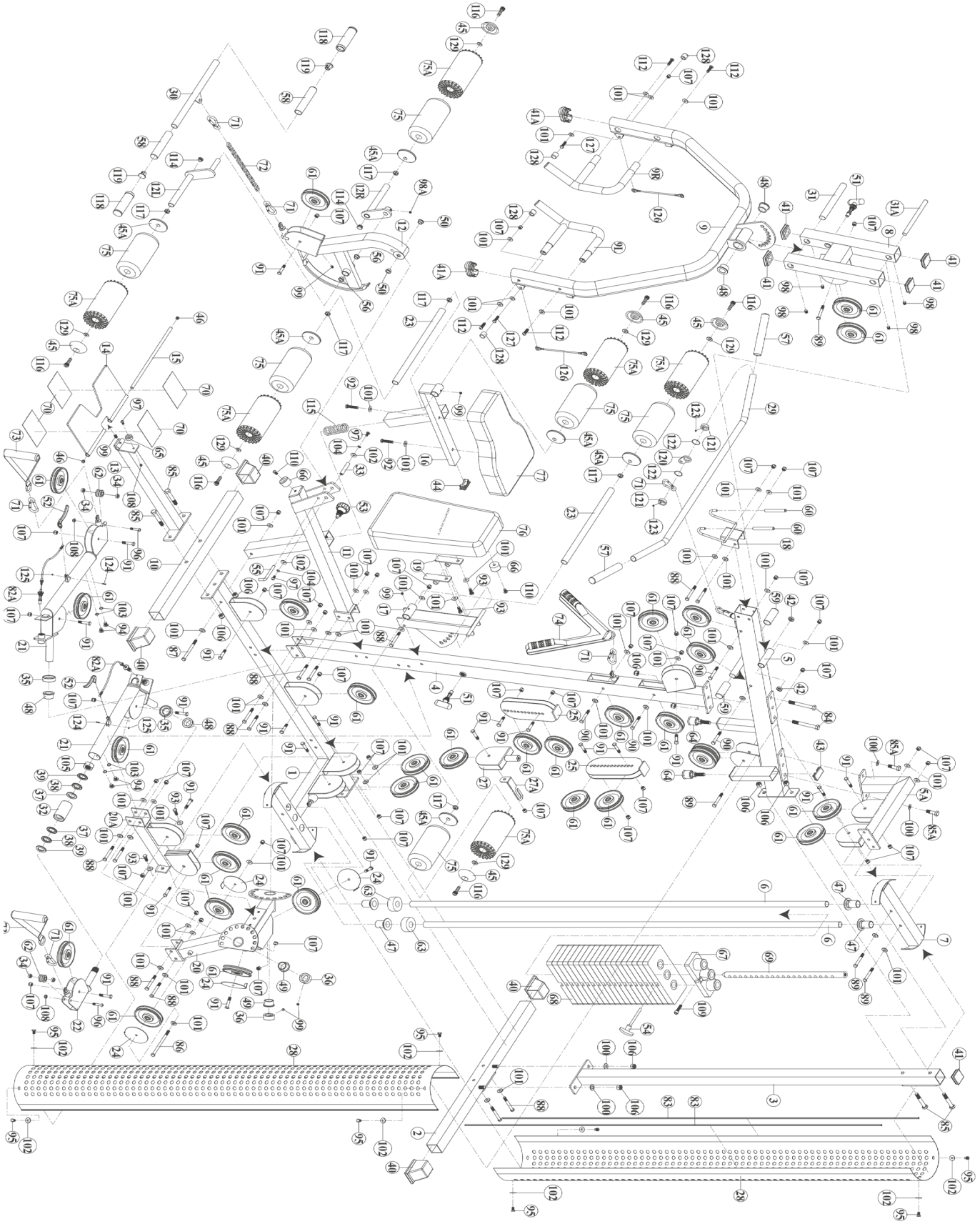

8 WARRANTY

Training equipment from BodyCraft® is subject to strict quality control. However, if a fitness equipment purchased from us does not work perfectly, we take it very seriously and ask you to contact our customer service as indicated. We are happy to help you by phone via our service hotline.

Error Descriptions
Your fitness equipment is developed for long-term, high-quality training. However, should a problem arise, please first read the operating instructions. For further assistance, please contact your contract partner or call our service hotline. To ensure your problem is solved as quickly as possible, please describe the defect as exactly as possible.

In addition to the statutory warranty, we provide a warranty for every fitness equipment purchased from us according to the following provisions.

Your statutory rights are not affected.

Warrantee
The warrantee is the first/original buyer and/or any person who received a newly purchased product as a gift from the original buyer.

Warranty periods
The following warranty periods begin on delivery of the fitness equipment.

Model	Usage	Full Warranty
BC-LPT	Home use	24 Months

Repair Costs
According to our choice, there will either be a repair, a replacement of individual damaged parts or a complete replacement. Spare parts, that have to be mounted while assembling the equipment, have to be replaced by the warrantee personally and are not a part of repair. After the expiration of the warranty period for repair costs, a pure parts warranty applies, which does not include the repair, installation and delivery costs.

The terms of use are defined as follows:

+ Home use: solely for private use in private households up to 3 hours per day
+ Semi-professional use: up to 6 hours per day (e. g. rehabilitation centres, hotels, clubs, company gyms)
+ Professional use: more than 6 hours per day (e. g. commercial gyms)

Warranty Service
Within the warranty period, equipment which develops faults as a result of material or manufacturing defects, will be repaired or replaced at our discretion. Ownership of equipment or parts of equipment which have been replaced is transferred to us. The warranty period is not extended nor does a new warranty period begin following repair or replacement under the warranty.

Warranty Conditions
For the warranty to be valid, the following steps must be taken:

Please contact our customer service by email or phone. If the product under warranty has to be sent in for repair, the seller bears costs. After expiry of the warranty, the buyer bears the costs of transport and insurance. If the fault is covered by our warranty, you will receive a new or repaired equipment in return.

Warranty claims are invalid in case of damage resulting from:

+ misuse or improper handling
+ environmental influences (moisture, heat, electrical surge, dust, etc.)
+ failure to follow the current safety measures for the equipment
+ failure to follow the operating instructions
+ use of force (e. g. hitting, kicking, falling)
+ interventions which were not carried out by one of our authorized service centres
+ unauthorised repair attempts

Proof of Purchase and Serial Number
Please make sure that you are able to provide the appropriate receipt when claiming on your warranty. So that we can clearly identify the model of your equipment, and for the purposes of our quality control, you will need to give the serial number of your equipment, when contacting the service team. Where possible please have your serial number and your customer number ready when you call our service hotline. It will help us to deal with your request swiftly.

If you cannot find the serial number on your fitness equipment, our service team is at your disposal to offer further information.

Service outside of the Warranty Period
We are also happy to issue an individual cost estimate if there is a problem with your fitness equipment after the warranty has expired, or in cases which do not fall under the terms of the warranty, e. g. normal wear and tear. Please contact our customer service team to find a quick and cost-effective solution to your problem. In such a case you will be responsible for the delivery costs.

Communication
Many problems can be solved just by speaking to us as your specialist supplier. We know how important it is to you as a user of the fitness equipment to have problems solved quickly and simply, so you can enjoy working out with minimal interruption. For that reason, we also want to resolve your queries quickly and in a straightforward manner. Thus, please always keep your customer number and the serial number of the faulty equipment handy.

9 CONTACT

DE

TECHNICAL SUPPORT

+49 4621 4210-900
+49 4621 4210-698
technik@sport-tiedje.de
Mo - Fr 08:00 - 18:00
Sa 09:00 - 18:00

SERVICE

0800 20 20277
(Freecall)
info@sport-tiedje.de
Mo - Fr 08:00 - 21:00
Sa 09:00 - 21:00
So 10:00 - 18:00

DK

TECHNICAL SUPPORT & SERVICE

80 90 16 50
+49 4621 4210-945
info@fitshop.dk
Mo - Fr 08:00 - 18:00
Sa 09:00 - 18:00

FR

TECHNICAL SUPPORT & SERVICE

+33 (0) 172 770033
+49 4621 4210-933
service-france@fitshop.fr
Mo - Fr 08:00 - 18:00
Sa 09:00 - 18:00

PL

TECHNICAL SUPPORT & SERVICE

22 307 43 21
+49 4621 42 10-948
info@fitshop.pl
Mo - Fr 08:00 - 18:00
Sa 09:00 - 18:00

BE

TECHNICAL SUPPORT & SERVICE

02 732 46 77
+49 4621 42 10-932
info@fitshop.be
Mo - Fr 08:00 - 18:00
Sa 09:00 - 18:00

UK

TECHNICAL SUPPORT

+44 141 876 3986
support@powerhousefitness.co.uk

SERVICE

+44 141 876 3972
Mo - Fr 9am - 5pm

NL

TECHNICAL SUPPORT & SERVICE

+31 172 619961
info@fitshop.nl
Ma - Do 09:00 - 17:00
Vr 09:00 - 21:00
Za 10:00 - 17:00

INT

TECHNICAL SUPPORT & SERVICE

+49 4621 4210-944
service-int@sport-tiedje.de
Mo - Fr 8am - 6pm
Sat 9am - 6pm

AT

TECHNICAL SUPPORT & SERVICE

0800 20 20277
(Freecall)
+49 4621 42 10-0
info@sport-tiedje.at
Mo - Fr 08:00 - 18:00
Sa 09:00 - 18:00

CH

TECHNICAL SUPPORT & SERVICE

0800 202 027
+49 4621 42 10-0
info@sport-tiedje.ch
Mo - Fr 08:00 - 18:00
Sa 09:00 - 18:00

Please find a detailed overview including address and opening hours for all stores of the Sport-Tiedje Group in Germany and abroad on the following website:

www.sport-tiedje.com/en/stores

WE LIVE FITNESS

WEBSHOP AND SOCIAL MEDIA

Sport-Tiedje is Europe's largest specialist store for home fitness equipment with currently 80 stores and one of the world's most renowned online mail order companies for fitness equipment. Private customers order via the 25 web shops in the respective national language or have their desired equipment assembled on site. In addition, the company supplies fitness studios, hotels, sports clubs, companies and physio practices with professional equipment for endurance and strength training.

Sport-Tiedje offers a wide range of fitness equipment from renowned manufacturers, high-quality in-house developments and comprehensive services, such as a build-up service and sports scientific advice before and after the purchase. The company employs numerous sports scientists, fitness trainers and competitive athletes.

Visit us also on our social media platforms or our blog!

www.sport-tiedje.co.uk
www.sport-tiedje.de/blog

www.facebook.com/SportTiedje

www.instagram.com/sporttiedje

www.youtube.com/user/sporttiedje

TAURUS

cardiostrong

BODYCRAFT

cardiojump

DARWIN FITNESS GERMANY

Notes

BODYCRAFT