adidas
PERFORMANCE

SQUAT STAND
ADBE-10239

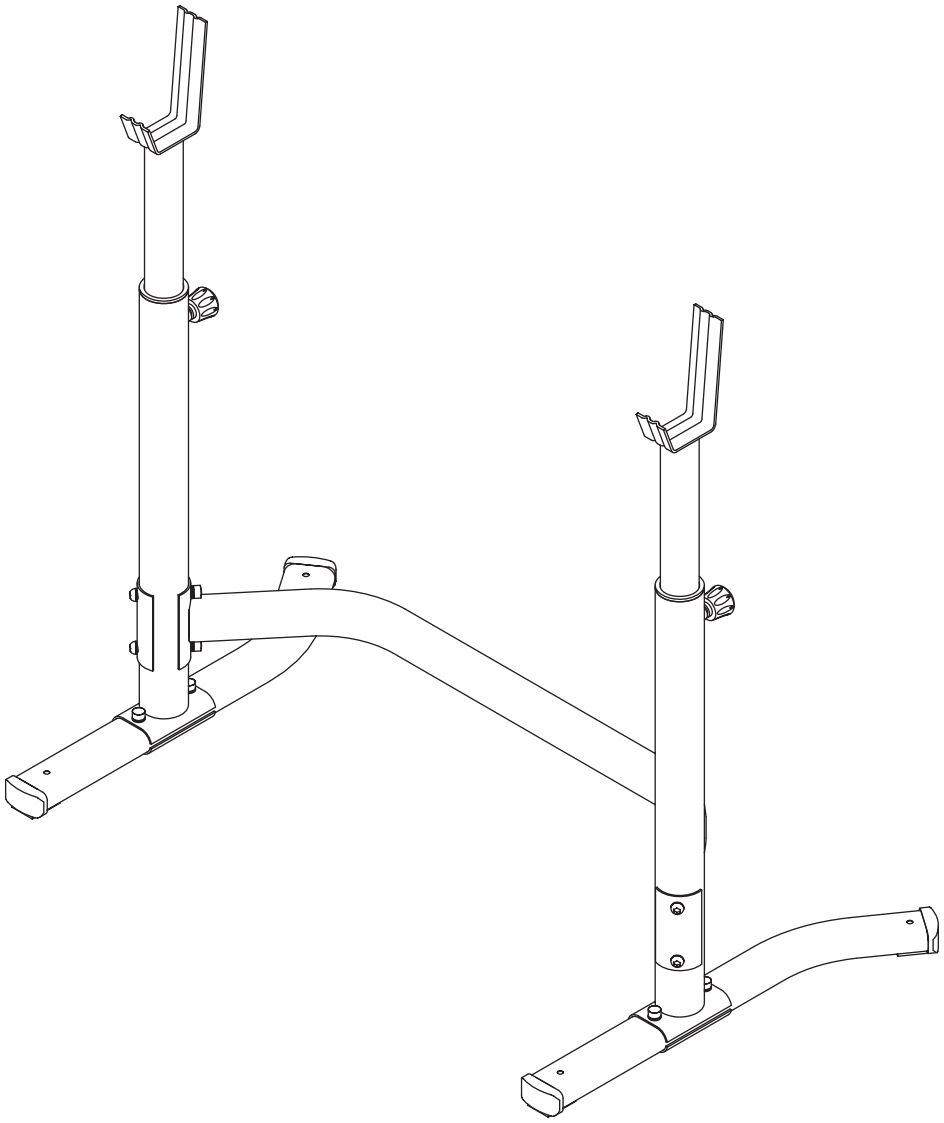

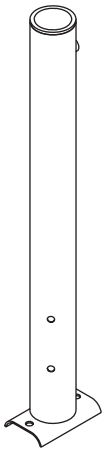

No.1 x 1

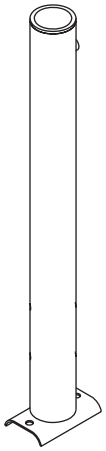

No.2 x 1

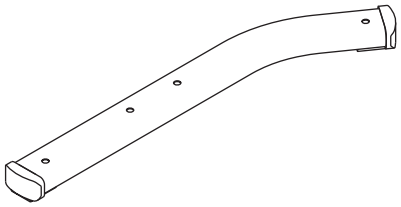

No.3 x 1

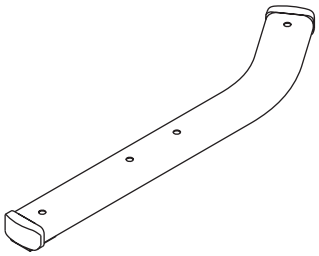

No.4 x 1

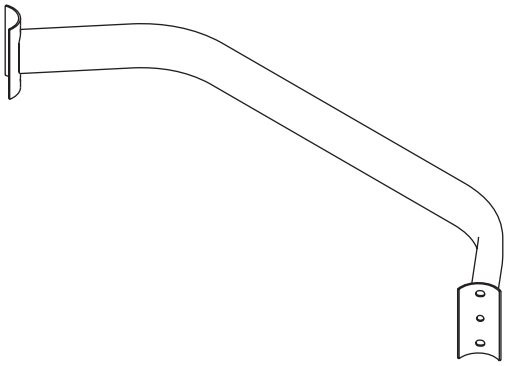

No.5 x 1

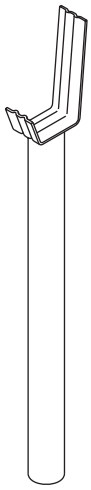

No.6 x 2

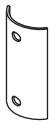

No.7 x 2

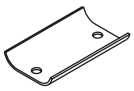

No.8 x 2

No.15 x 8

No.16 x 2

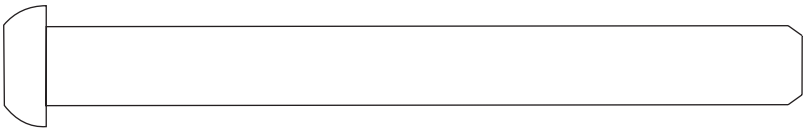

M10x100mm Bolt / Perno / Boulon (9)

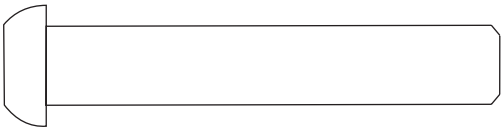

M10x60mm Bolt / Perno / Boulon (10)

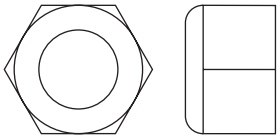

M10 Nylon Locknut
Écrou en Nylon /
Contratuerca de nilón (11)

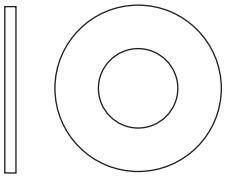

M10 Washer
Arandela / Rondelle (12)

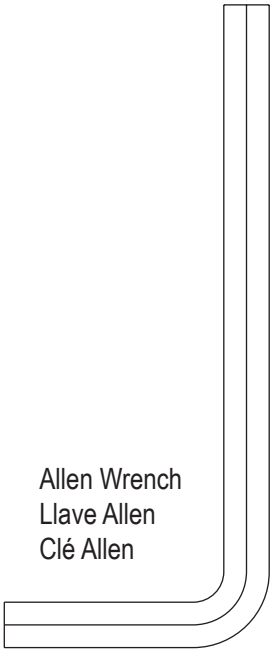

Allen Wrench
Llave Allen
Clé Allen

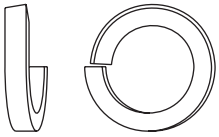

M10 Spring Washer (17)

⑩	×4	M10×60mm
⑪	×4	M10
⑫	×8	Ø20xØ10.5
⑰	×4	M10

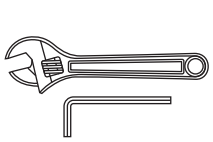

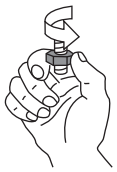

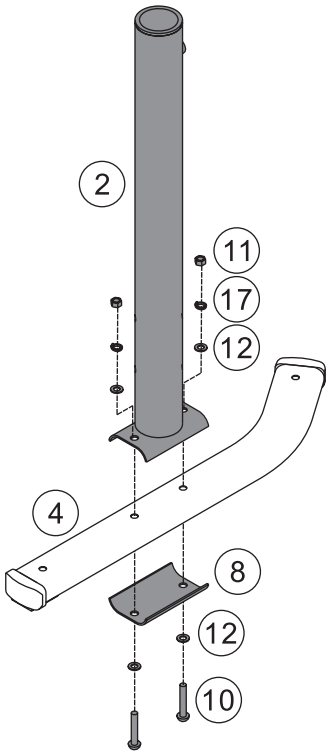

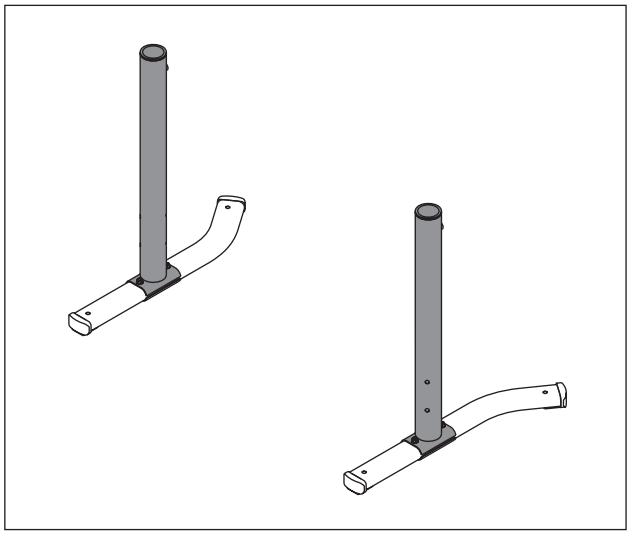

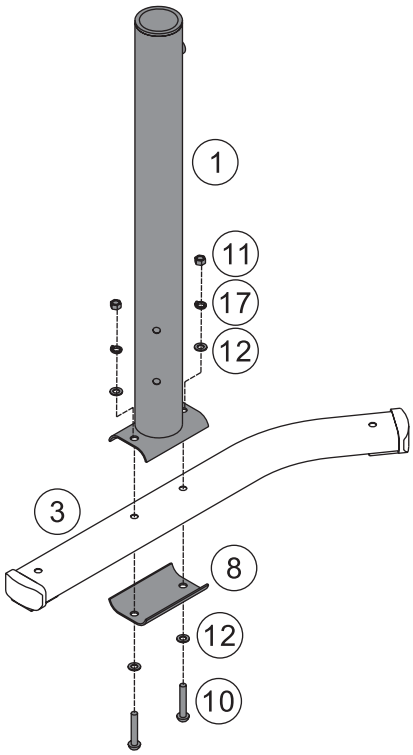

⑨		×4	M10×100mm
⑪		×2	M10
⑫		×8	Ø20xØ10.5
⑰		×4	M10

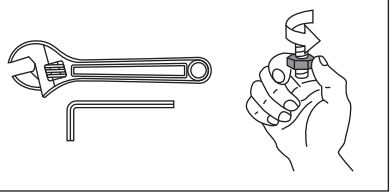

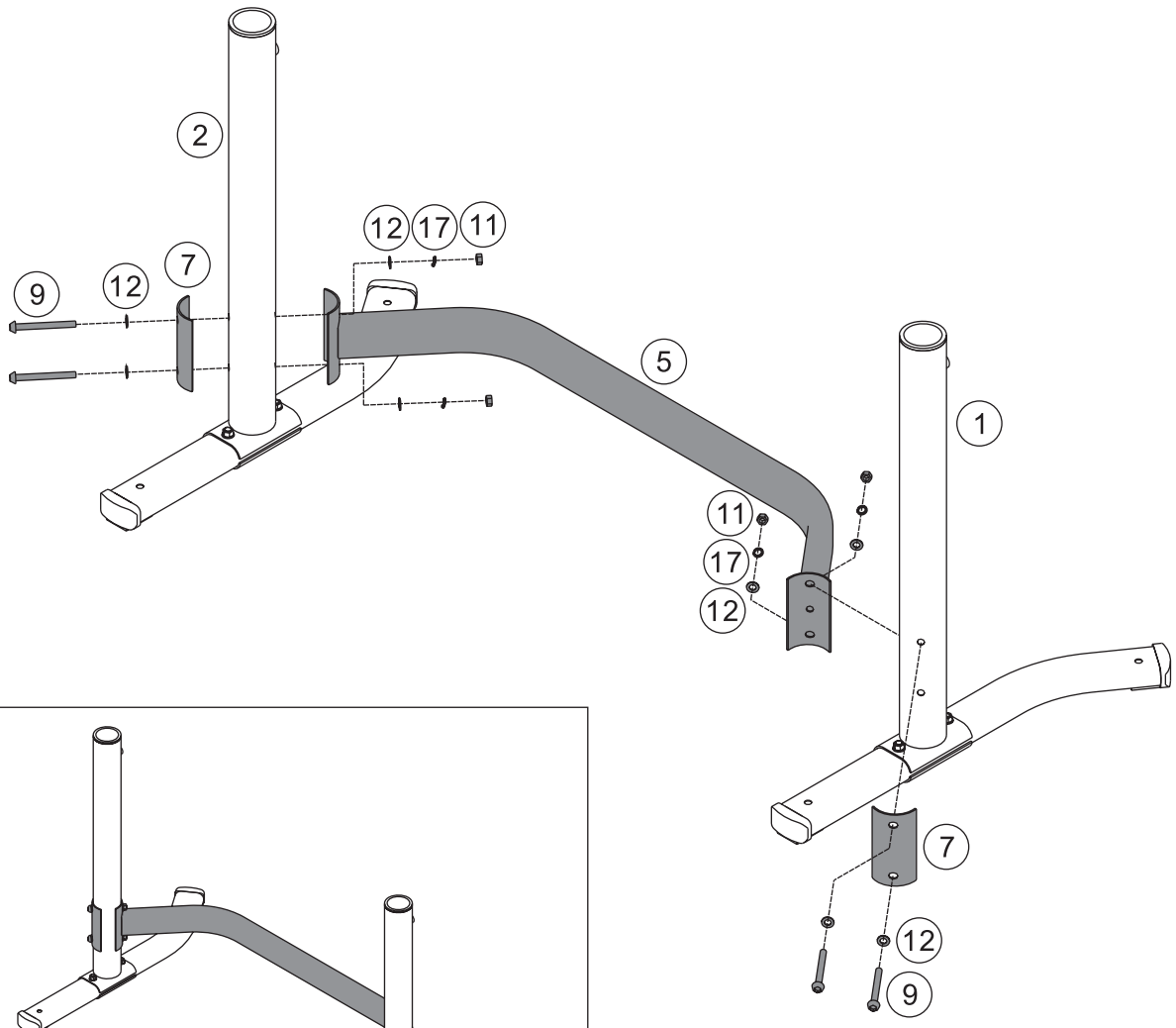

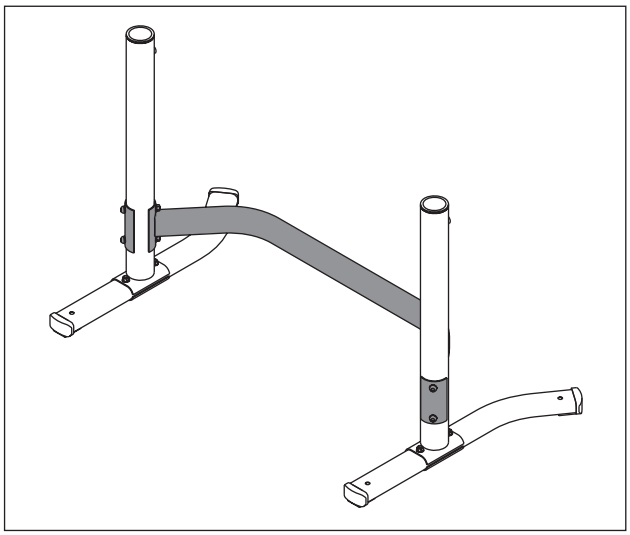

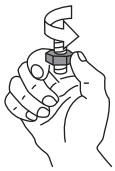

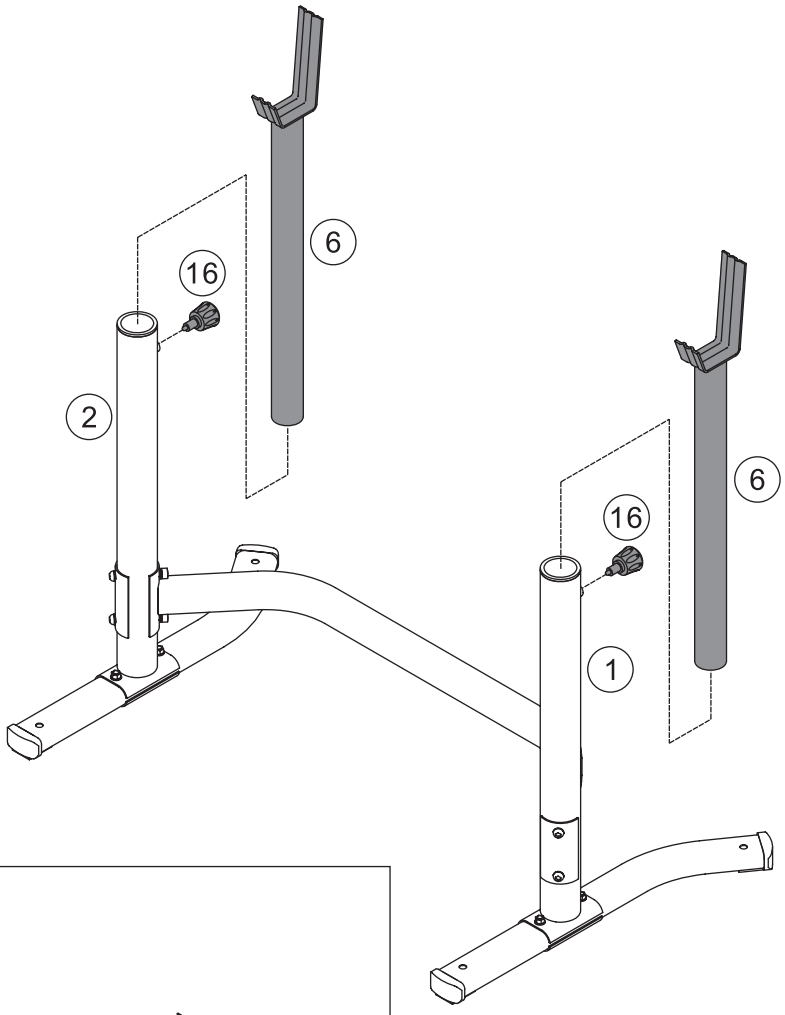
6
16
2
6
16
1

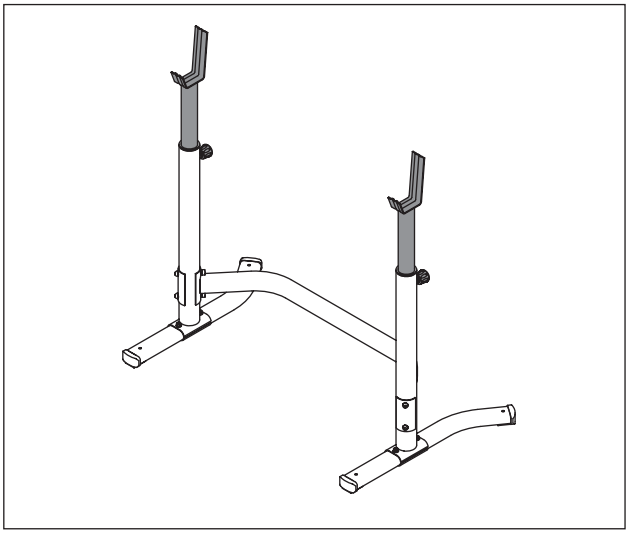

⑮		×8 Ø20xØ10.5

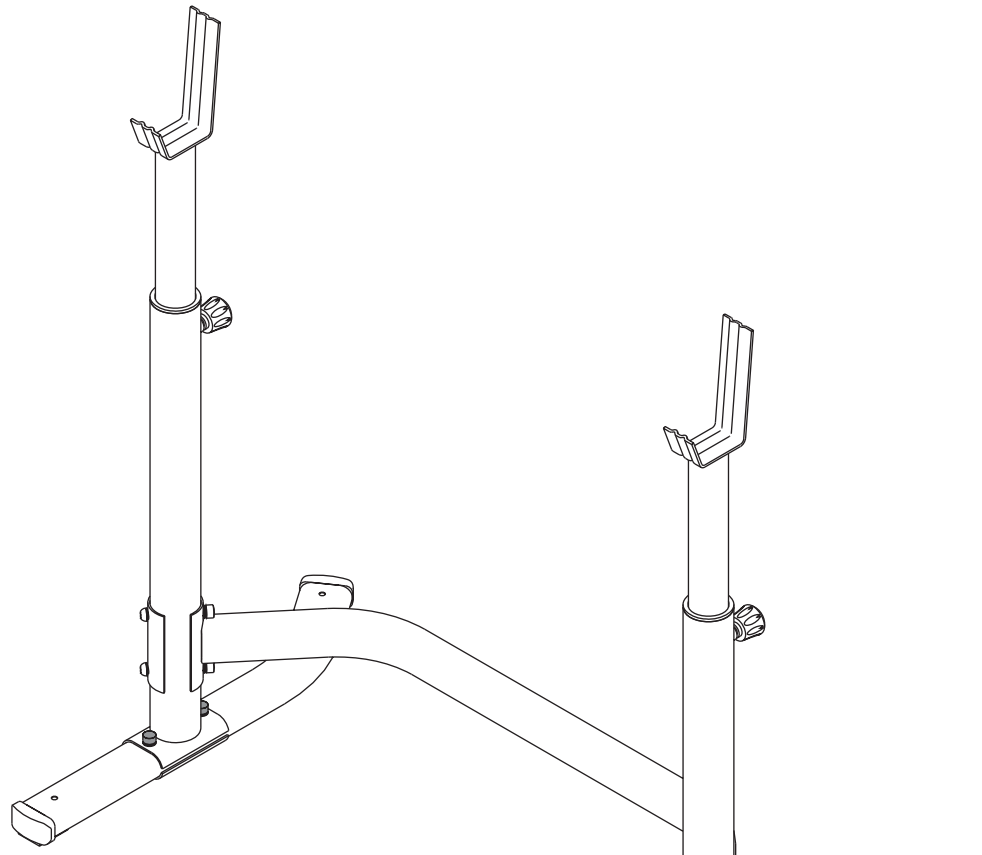

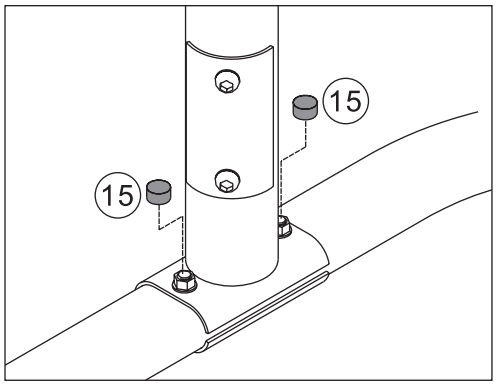

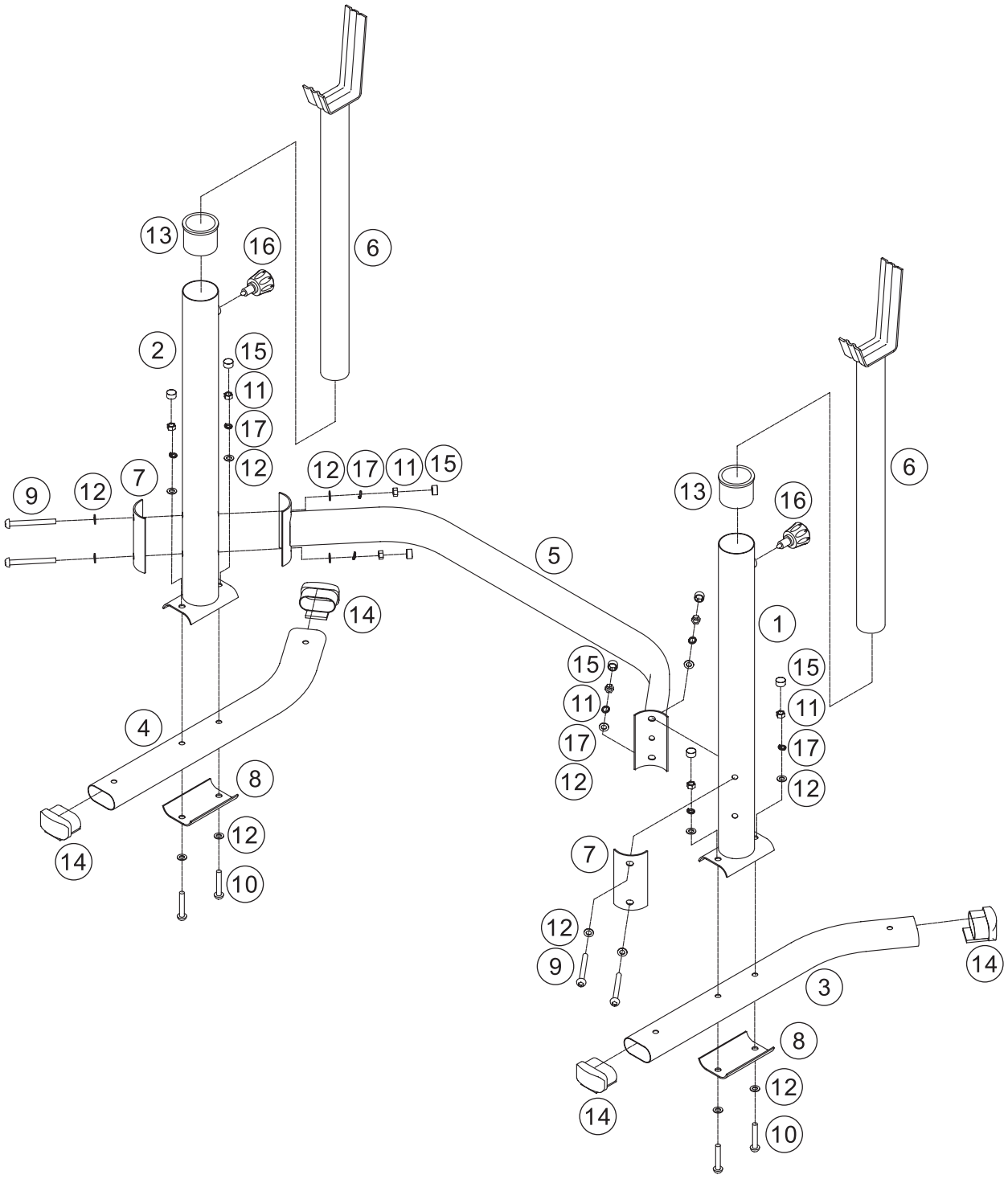
13
16
6
2
15
11
17
12
9
12
7
12
17
11
15
5
14
4
8
12
14
10
13
16
6
1
15
11
17
12
15
11
17
12
7
12
9
14
3
8
12
14
10

No.	Part No.	Description	Qty.
1	FMADPER6C-01	Left Upright Beam	1
2	FMADPER6C-02	Right Upright Beam	1
3	FMADPER6C-03	Left Base Frame	1
4	FMADPER6C-04	Right Base Frame	1
5	FMADPER6C-05	Cross Brace	1
6	FMADPER6C-06	Crutch	2
7	FMADPER6C-07	Support Plate Round	2
8	FMADPER6C-08	Support Plate Ellipse	2
9	PFM2101-24	M10 x 100mm Bolt	4
10	PFMS80-26	M10 x 60mm Bolt	4
11	PRK1-05	M10 Nylon Locknut	8
12	PRK1-06	M10 Washer	16
13	FMADPER6C-09	76x60mm Round Plastic Bushing	2
14	PFMH1001-21	40x80mm Ellipse End Cap	4
15	FMAD614AB-23	Bolt Cover Cap	8
16	FMAD614AB-25	Pop Pin	2
17	FMAD613-06	M10 Spring Washer	8

Product Guarantee:

This product is guaranteed against manufacturing defects for a period of **ONE year.**

• In the event of a problem with the product with in the guarantee period call the

Customer Helpline: 0800 440 2459.

• 质保期内，一旦产品出现问题，请拨打

客户热线：0086-411-82766207

• I tilfælde af et problem med produktet inden for garantien kan du ringe til

Kundehjælpelinjen: +45 2859 1998.

• Mikäli tuotteessa ilmenee ongelma takuuajan kuluessa, soita

Asiakaspalveluun: +45 2859 1998.

• Si vous rencontrez un problème avec le produit pendant la période de garantie, veuillez appeler notre

Assistance téléphonique client : +33 (0)171 82 84 99.

• Im Falle eines Problems mit dem Produkt innerhalb des Garantiezeitraums rufen Sie bitte folgen de Nummer an

Kundendienst: +49 (0) 6431 58463-0.

• Σε περίπτωση προβλήματος με το προϊόν εντός της περιόδου εγγύησης, τηλεφωνήστε στη

Γραμμή Βοήθειας Πελατών: +30 210 2758228.

• In caso di problemi con il prodotto durante il periodo di garanzia, contattare il numero di

Assistenza Clienti: +49 (0) 6431 58463 13.

• In het geval van een probleem met het product binnen de garantieperiode, neemt u Contact op m et

de klantenservice: +49 (0)6 431 58 4630.

• Ved et problem med produktet innen garantiperioden ring

Kundeservice: +45 2859 1998.

• Caso ocorra algum problema com o produto durante a garantia, contacte a

Linha de Apoio a Clientes: +35 1 96 10 14 778.

• Si experimenta algún problema con el producto dentro del plazo de garantía, puede contactar co n nosotros a través de:

Teléfono de atención al cliente: +34 800 600 816.

• Om problem med produkten uppstår under garantiperioden, kontakta

Kundtjänst: +46 (0)40-303144.

• Garanti süresi içinde ürünle ilgili herhangi bir sorun yaşanması durumunda, şu Numarayı arayınız:

Müşteri Yardım Hattı: +90 212 8757901.